GAME PLAY AND SCORING

HAUNTED HOUSE

BONUS MULTIPLIER

- The ball changing levels advances the "BONUS MULTIPLIER" except for when the ball is shot into the lower level up-kicker from the main playfield and when the ball rolls down the attic ramp to the main floor (middle level).
- When the ball is shot up the attic (upper level) ramp, it must first hit either a spot target or a drop target in order to advance the "BONUS MULTIPLIER".

DOUBLE SCORING

- Completing the lower level target bank twice or the upper level target bank three times lights double scoring for middle level.
- Making 11 "hits" on the upper level lights double scoring on lower level.
- Making 11 "hits" on lower level lights double scoring on upper level.
- The ball entering the attic (upper level) hole will turn off upper level light for double scoring.
- Ball entering lower level up-kicker will turn off light for lower level double scoring.

DOUBLE BONUS

- Completing the cellar (lower level) drop target bank twice lights the top left hole located on the middle playfield. The ball entering the hole lights double bonus for the attic.
- Completing the attic (upper level) drop target bank three times lights the right top hole on the main playfield. The ball entering the hole will light the double bonus for the main floor.
- Completing the target sequence 1 through 5 (in sequence) lights the center hole on the main floor (main playfield). The ball entering the hole will light the double bonus for the cellar.

EXTRA BALL

- Completing targets 1 through 5 or completing any drop target bank lights the Extra Ball lamp.
- Entering right side kicker awards Extra Ball.
- After Extra Ball is lit, any middle level switch will toggle Extra Ball light on, off, on, etc.

SPECIAL

- Completing targets 1 through 5 in order or completing upper level target bank three times lights lower level hole for Special.
- Completing lower level target bank twice lights upper level bank for Special.
- Ball entering lower level hole awards Special when lower level lamp is lit.
- Completing upper level drop target sequence awards Special when lit.

BONUS

- Bonus is random anywhere from 0-1000 points.
- Upper level hole, drop targets and spot targets will each add Bonus.
- Middle level-left outside rollover, side kicker, trap door switch, left return rollover and targets in sequence 1 through 5 will each add Bonus. When flashing, targets in sequence 1 through 5 will add 2 Bonus.
- Lower level-drop targets, spot targets and lower up-kicker will each add Bonus.

GOTTLIEB ®

ATTIC (Upper Playfield)

HOLE

- Score 3,000 points.
- Turns off upper level double scoring light.
- Resets drop target bank (5-Ball only).

DROP TARGETS

- Score 3,000 points and adds bonus.
- Completing the sequence lights the side kicker for Extra Ball, adds an additional light to the upper level spot target sequence, resets the bank and awards Special when lit.
- Completing the sequence three times lights the cellar (lower level) hole for Special.

SPOT TARGETS

- Score 3,000 points when lit or if all targets are lit, score 3,000 points and add Bonus.
- Score 500 points unlit.

CELLAR (Lower Level)

HOLE
- Score 5,000 points.
- Awards Special when lit.

KICKING TARGET
- Score 1,000 points.

OUTSIDE ROLLOVER
- Score 1,000 points.

DROP TARGETS
- Score 3,000 points and adds Bonus.
- Completing sequence lights side kicker for Extra Ball and resets bank.
- Completing sequence twice lights attic (upper level) for Special. Left top hole on middle level and middle level for double scoring.

LEFT SPOT TARGET
- Score 1,000 points.
- Adds Bonus when lit.
- Lit after one completion of lower target bank.

RIGHT SPOT TARGET
- Score 1,000 points.
- Adds Bonus when lit.
- Lit after 2 completions of lower target bank.

LOWER UP-KICKER
- Score 3,000 points and adds Bonus if ball has fallen through the hole (up-kicker) on the main floor (middle playfield).
- Score 6,000 points if cellar (lower playfield) target bank has been completed twice and the ball has been in play on cellar (lower level) playfield.

MAIN FLOOR (Middle Playfield)

ROLL-DOWN TARGET
- Score 5,000 points.
- Lights trap door when lit.

SPOT TARGETS
- Score 500 points.

LOWER RIGHT SIDE ROLLUNDER
- Score 500 points.
- Lights left outside rollover.

LEFT OUTSIDE ROLLOVER
- Score 5,000 points.
- Adds Bonus when lit.

RIGHT OUTSIDE ROLLOVER
- Score 5,000 points.

RIGHT SIDE KICKER
- Score 500 points and adds Bonus.
- Awards Extra Ball when lit.

TRAP DOOR ROLLUNDER
- Score 500 points and adds Bonus.
- Opens trap door when lit.

TRAP DOOR SWITCH
- Score 10,000 points.
- Closes trap door.

LEFT RETURN ROLLOVER
- Score 500 points, adds Bonus and opens trap door.

THREE TOP HOLES
- Score 5,000 points.
- Lights Double Bonus when lit.

LEFT— Lights attic (upper level) Double Bonus.
CENTER— Lights cellar (lower level) Double Bonus.
RIGHT— Lights main floor (main level) Double Bonus.

TARGET SEQUENCE 1 THROUGH 5
- Score 5,000 points and add Bonus when lit.
- Score 10,000 points and add 2 Bonus when flashing.
- Score 500 points unlit.
- Completing sequence in order lights middle hole at top of main playfield, lights side kicker for Extra Ball and lights lower level hole for Special.

ADDITIONAL SCORING
- 10-point switches on all levels score 30 points.
- Pop bumpers on all levels score 1,000 points (3-Ball) or 100 points (5-Ball).

GOTTLIEB®

Gottlieb™
AMUSEMENT GAMES
165 W. Lake Street Northlake, IL 60164
(312) 562•7400 Telex 72•8463
A Columbia Pictures Industries Company

I. INSTALLATION

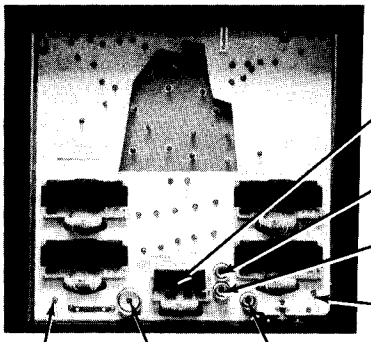

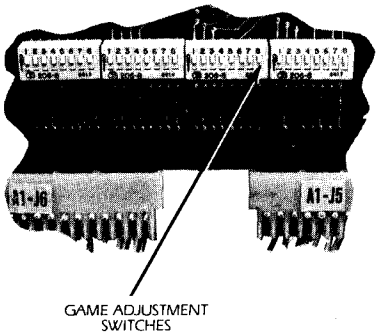

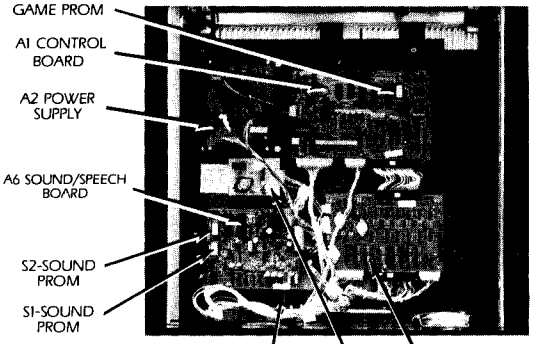

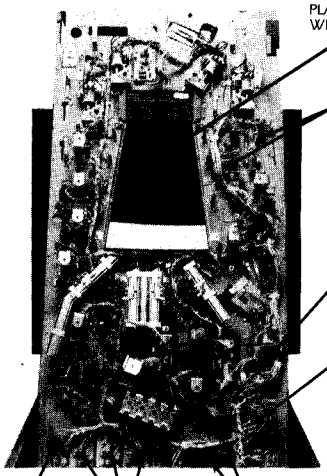

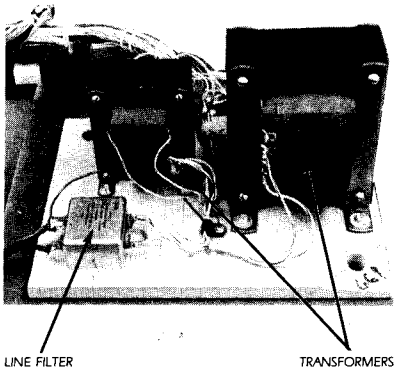

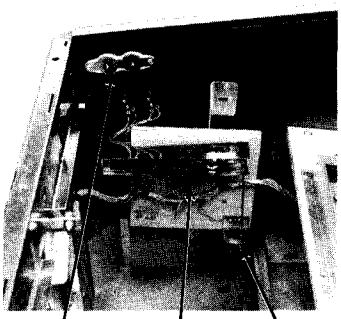

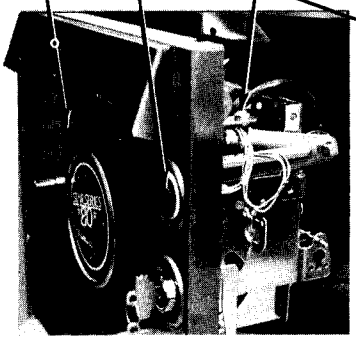

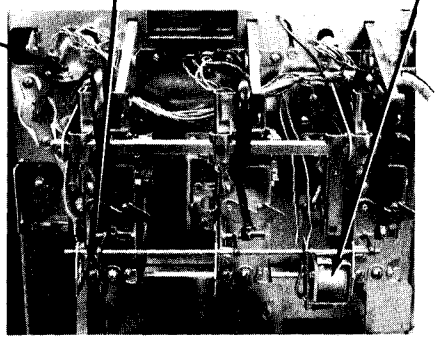

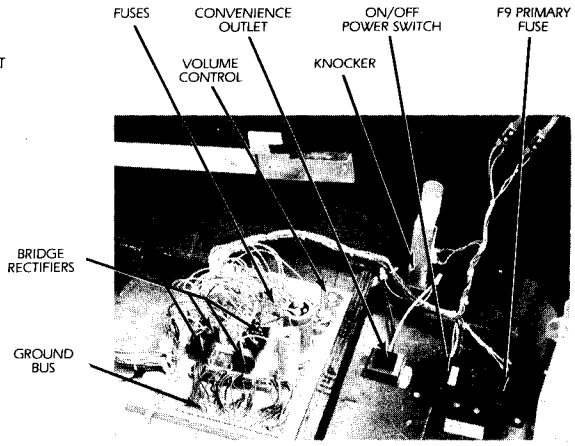

GOTTLIEB ®

I. INSTALLATION

A. SET-UP

1. Bolt the legs to the cabinet.
2. Open the cabinet door and loosen the front moulding locking arm.
3. Remove the moulding from the playfield.
4. Slide the cabinet glass forward and remove it.
5. Raise the playboard, slide it forward and rest it on its supports.
6. From the inside of the cabinet, remove the binding strap from the power cord. Feed the cord to the outside of the cabinet through the black plastic line cord housing.
7. Place the lightbox atop the pedestal and engage the holding bracket.

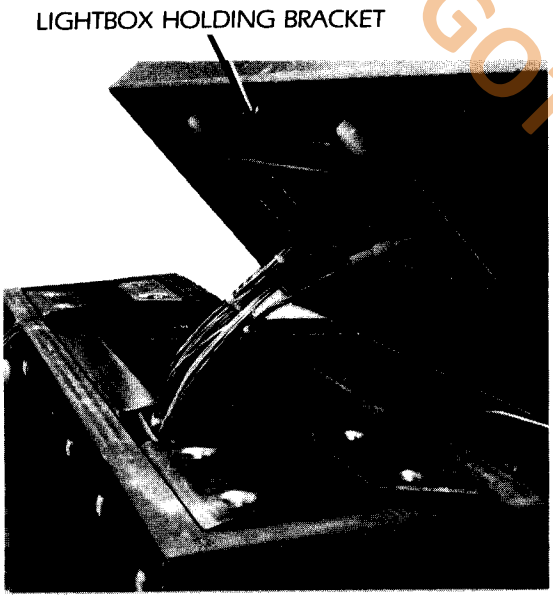

8. Unlock the lightbox and remove the backglass.
9. Loosen and lower the shipping bracket at the top center of the lightbox insert panel.
10. Lift the insert; then swing it out.
11. Secure the lightbox to the cabinet with the bolts and washers provided.
12. Connect all cables in the lightbox.

B. CHECK-OUT

1. Check that all cables are clear of moving parts.
2. Check for any loose wires.
3. Check switches or loose solder or other foreign matter.
4. Be certain all fuses are firmly seated.
5. Check transformers for any foreign matter across terminals.
6. Be sure transformer wiring corresponds to the supply voltage.
7. Check the setting of the normally open tilt switch on the underside of the playfield. One blade should be free-floating with a weight on the end.
8. Check that the surface of the plexiglass panel is flush with the surface of the main playfield.

   CAUTION: Clean the plexiglass with glass cleaner and a soft cloth only. Never use abrasive materials.
   NOTE: The allen screws used are 6-32 x 5/8" flatheads, requiring a 5/64 allen wrench.
9. Check that a sponge rubber washer has been inserted underneath the plexiglass at each attachment point.
10. Reassemble and level the game.
11. The plumb-bob tilt can be adjusted by loosening the wing nut and raising the plumb-bob to increase its sensitivity, or lowering it to decrease its sensitivity.

    The ball-roll tilt can be adjusted by loosening the front screw or raising the tilt bracket to increase sensitivity, or lowering it to decrease its sensitivity.
12. With the line cord unplugged, drop a coin into one of the chutes. It should be rejected.
13. Plug the game into a properly grounded 3-wire receptacle **ONLY!**
14. Refer to **Section VI** to make all necessary game adjustments.

GOTTLIEB®

C. UPPER PLAYFIELD REMOVAL

1. Remove the two posts located at the bottom of the upper playfield ramp by unfastening the screws (one per post) which secures them to the main playfield.

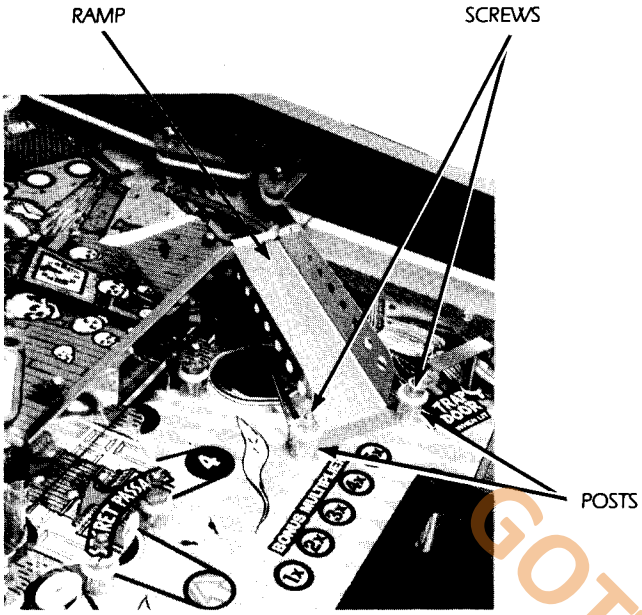

2. Lift the ramp straight up and remove it from the playfield.

3. Lift the main playfield and position it so that its supports are seated on the front edge of the cabinet.

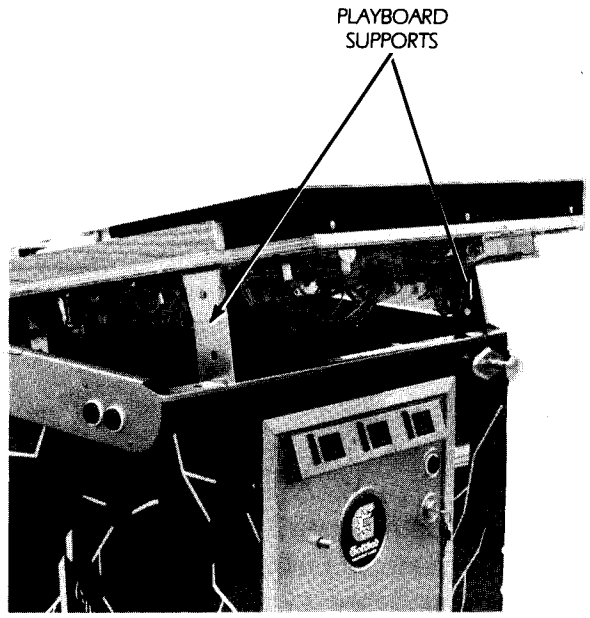

4. The front left and right sides of the upper playfield are each attached to a slotted bracket with a slotted hexagon head screw. Loosen these two screws (left not shown) only enough so that the playfield can be lifted from the brackets.

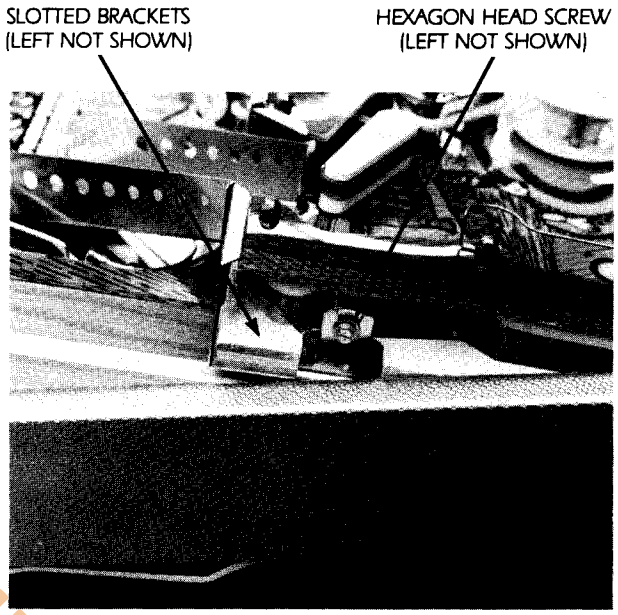

5. Lift the front end of the playfield, approximately five inches, and then pull it forward until its support brackets, located at the rear of the playfield, clear their slots.

6. The playfield's three plugs are now accessible and should now be disconnected.

7. The upper playfield can now be removed from the main playfield.

GOTTLIEB ®

D. CELLAR (LOWER PLAYFIELD)

1. Remove the bolts located at the front left and right corners of the playboard. After replacing the playboard always reinstall these bolts.

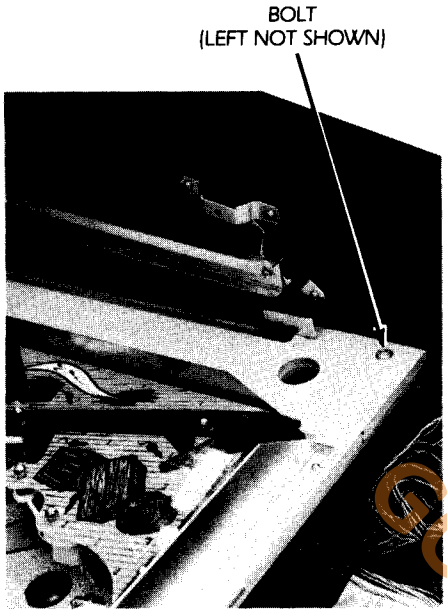

2. Pull the playboard straight back until it clears the top of its front support brackets.

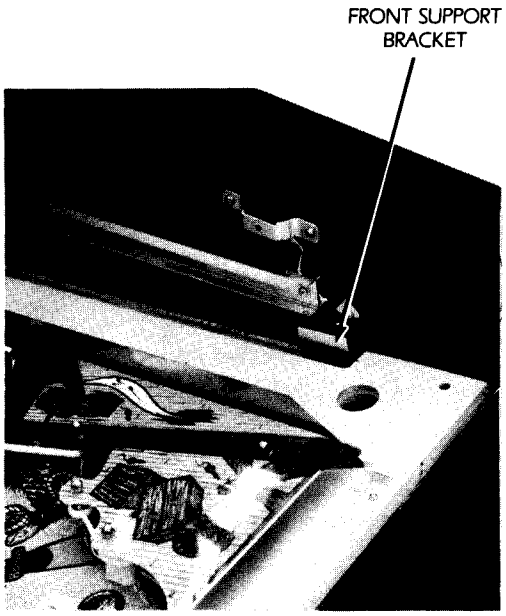

3. Pivot the playboard back until it rests against the upper playfield.
4. Disconnect the plugs.
5. The playfield can now be removed.

E. MIDDLE PLAYFIELD REMOVAL

1. Pivot the front end of the upper playfield until it is at least 12 inches above the front of the cabinet.

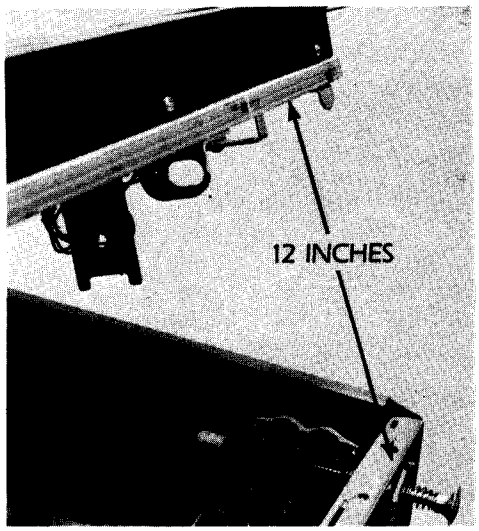

2. Pull the playfield toward you until its back end is 1 to 2 inches from the front end of the playfield support assemblies.

   CAUTION: While completing step two, check that the upper playfield wiring harness, is clearing the lower playfield.

3. The upper playfield can now be pivoted back until it rests on the lightbox or, after disconnecting its wiring harness, it can be totally removed.

GOTTLIEB®

II. INITIALIZATION

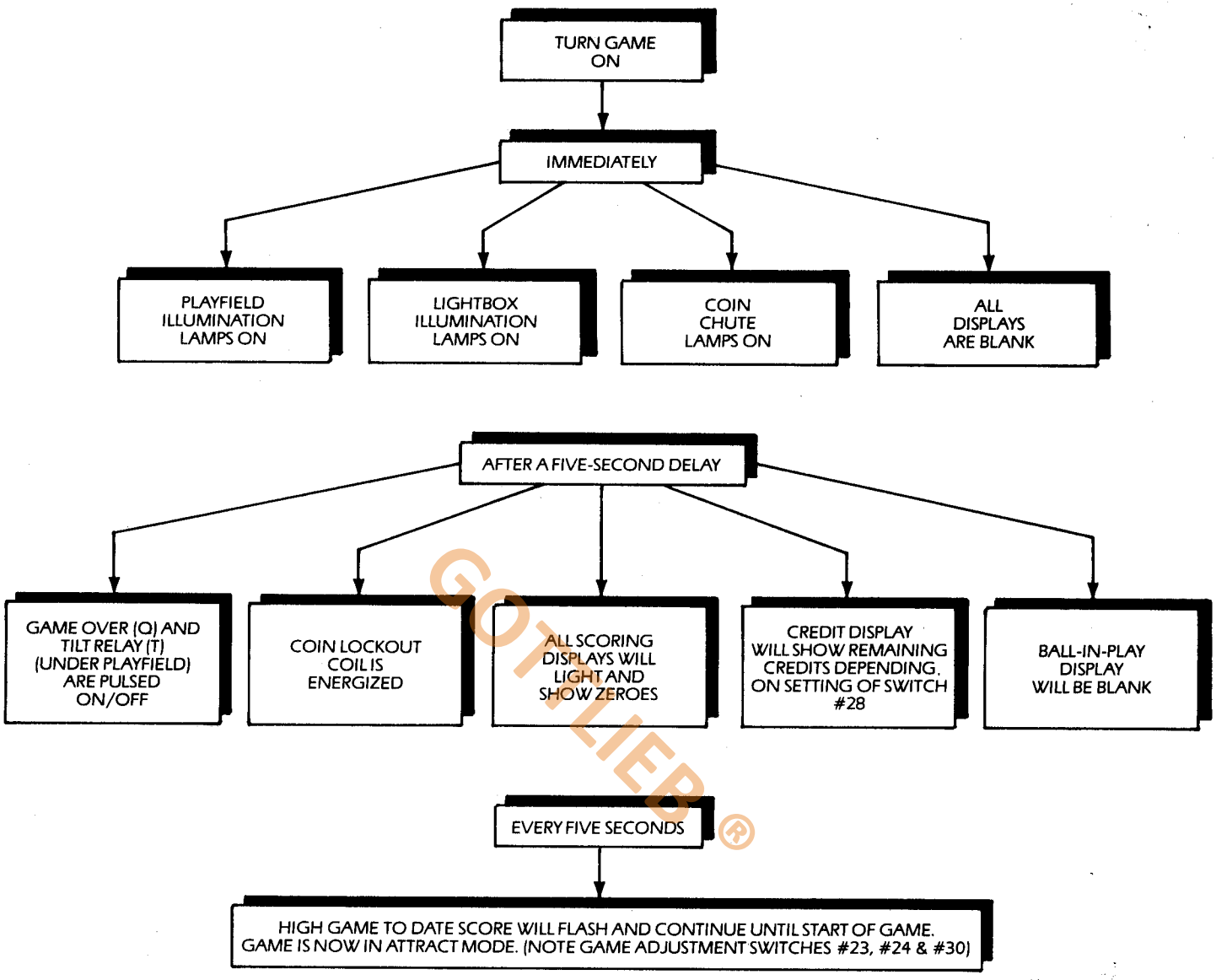

GOTLIEB®

III. GAME OPERATION

A. GAME START

The ball must be in the ball return trough to start a game.

1. Insert coins into coin chute.
   a. Coin chute tune is played (dependent on Switch #27).
   b. Total credits are displayed in status display (dependent on Switch #28).
2. Press Credit Button to start game.
   a. Credit tune is played.
   b. Total credits displayed decrease by one.
3. All playfield features reset.
4. The first player score display flashes a single zero.
5. When the ball is released to the shooter:
   a. Playfield-controlled lamps flash.
   b. High Game to Date is briefly displayed in all 4 players' score displays and the lower playfield display.

III. GAME OPERATION

B. FIRST PLAYER

1. First player's score display flashes zero.
2. The other players' displays are now blank.
3. A "1" appears on the ball-in-play display.
4. When the ball enters the outhole, any bonus earned is scored.

C. ADDITIONAL PLAYERS

1. Additional players are indicated by a zero (not flashing) in each corresponding player's display.
2. After the maximum number of players are added, or no more credits remain, the Credit Button has no effect.
3. Additional players can be added anytime the first player's ball is still in play. If the Credit Button is pressed after the first player's first ball has entered the outhole, all players' scores will be erased with the first player's score display showing a flashing zero, indicating a new game only for the first player.

D. EXTRA BALLS

1. When the SHOOT AGAIN lamp is lit, neither the player-up nor the ball-in-play display changes when the ball enters the outhole.
2. Only one extra ball per ball-in-play is given.

E. TILT MODE

1. Tilting the game results in a loss of ball in play.
2. When the game is tilted, all the playfield lamps go off.
3. All accumulated bonus and bonus multipliers are lost.

F. SLAM MODE

1. If the normally closed slam switch (located inside front door) is opened, the entire game is ended for all players.
2. The GAME OVER lamp comes on.
3. The entire switch matrix is inactive for three seconds.
4. All coins will be rejected if dropped into any coin chute during the three-second delay.
5. If the match feature exists (dependent on Switch # 18), a replay can be won even if the game is slammed.
6. Game returns to the attract mode.

G. GAME OVER

1. When the last ball enters the outhole, the GAME OVER lamp continually flashes.
2. A random number appears in the ball-in-play display. If this number matches the last two digits in any player's score, a replay (dependent on Switch # 18) is awarded.
3. HGTD is periodically flashed in all players' displays. When a score higher than this is achieved, an award (dependent on Switches #23 and #24) is given.
4. All of the target banks will reset.

GOTTLIEB ©

IV. GAME PLAY AND SCORING

BONUS MULTIPLIER

- The ball changing levels advances the "BONUS MULTIPLIER" except for when the ball is shot into the lower level up-kicker from the main playfield and when the ball rolls down the UPPER PLAYFIELD ramp to the main floor (middle level).
- When the ball is shot up the upper level ramp, it must first hit either a spot target or a drop target in order to advance the "BONUS MULTIPLIER".

DOUBLE SCORING

- Completing the lower level target bank twice or the upper level target bank three times lights double scoring for middle level.
- Making 11 "hits" on the upper level lights double scoring on the lower level.
- Making 11 "hits" on lower level lights double scoring on upper level.
- The ball entering the upper level hole will turn off upper level light for double scoring.
- Ball entering lower level up-kicker will turn off light for lower level double scoring.

DOUBLE BONUS

- Completing the cellar (lower level) drop target bank twice lights the top left hole located on the middle playfield. The ball entering the hole lights double bonus for the upper level.
- Completing the upper level drop target bank three times lights the right top hole on the main playfield. The ball entering the hole will light the double bonus for the main floor.
- Completing the target sequence 1 through 5 (in sequence) lights the center hole on the main floor (main playfield). The ball entering the hole will light the double bonus for the cellar.

EXTRA BALL

- Completing targets 1 through 5 or completing any drop target bank lights the Extra Ball lamp.
- Entering right side kicker awards Extra Ball.
- After Extra Ball is lit, any middle level switch will toggle Extra Ball light on, off, on, etc.

SPECIAL

- Completing targets 1 through 5 in order or completing upper target bank three times lights lower hole for Special. Completing lower level target bank twice lights upper level bank for Special.
- Ball entering lower level hole awards Special when lower level lamp is lit.
- Completing upper level drop target sequence awards Special when lit.

BONUS

- Bonus is random anywhere from 0-1000 points.
- Upper level hole, drop targets and spot targets will each add bonus.
- Middle level-left outside rollover, side kicker, trap door switch, left return rollover and targets in sequence 1 through 5 will each add Bonus. When flashing, targets in sequence 1 through 5 will add 2 Bonus.
- Lower level-drop targets, spot targets and lower-level up-kicker will each add Bonus.

UPSTAIRS (Upper Playfield) HOLE

- Scores 3,000 points.
- Turns off upper level double scoring light.
- Resets drop target bank (5-Ball only).

DROP TARGETS

- Score 3,000 points and adds bonus.
- Completing the sequence lights the side kicker for Extra Ball, adds an additional light to the upper level spot target sequence, resets the bank and awards Special when lit.
- Completing the sequence three times lights the cellar (lower level) hole for Special.

SPOT TARGETS

- Score 3,000 points when lit or if all targets are lit, score 3,000 points and add Bonus.
- Score 500 points unlit.

GOTTLIEB®

IV. GAME PLAY AND SCORING

CELLAR (Lower Level) HOLE

- Score 5,000 points.
- Awards Special when lit.

KICKING TARGET

- Score 1,000 points.

OUTSIDE ROLLOVER

- Score 1,000 points.

DROP TARGETS

- Score 3,000 points and adds Bonus.
- Completing sequence lights side kicker for Extra Ball and resets bank.
- Completing sequence twice lights upper level for Special, left top hole on middle level and middle level for double scoring.

LEFT SPOT TARGET

- Score 1,000 points.
- Adds Bonus when lit.
- Lit after one completion of lower target bank.

RIGHT SPOT TARGET

- Score 1,000 points.
- Adds Bonus when lit.
- Lit after 2 completions of lower target bank.

LOWER UP-KICKER

- Score 3,000 points and adds Bonus if ball has fallen through the hole (up-kicker) on the main floor (middle playfield).
- Score 6,000 points if cellar (lower playfield) target bank has been completed twice and the ball has been in play on cellar (lower level) playfield.

MAIN FLOOR (Middle Playfield) ROLL-DOWN TARGET

- Score 5,000 points.
- Lights trap door when lit.

SPOT TARGETS

- Score 500 points.

LOWER RIGHT SIDE ROLLUNDER

- Score 500 points.
- Lights left outside rollover.

LEFT OUTSIDE ROLLOVER

- Score 5,000 points.
- Adds Bonus when lit.

RIGHT OUTSIDE ROLLOVER

- Score 5,000 points.

RIGHT SIDE KICKER

- Score 500 points and adds Bonus.
- Awards Extra Ball when lit.

TRAP DOOR ROLLUNDER

- Score 500 points and adds Bonus.
- Opens trap door when lit.

TRAP DOOR SWITCH

- Score 10,000 points.
- Closes trap door.

LEFT RETURN ROLLOVER

- Score 500 points, adds Bonus and opens trap door.

THREE TOP HOLES

- Score 5,000 points.
- Lights Double Bonus when lit.

Left - Lights upstairs (upper level) Double Bonus.

Center - Lights cellar (lower level) Double Bonus.

Right - Lights main floor (main level) Double Bonus.

TARGET SEQUENCE 1 THROUGH 5

- Score 5,000 points and add Bonus when lit.
- Score 10,000 points and add 2 Bonus when flashing.
- Score 500 points unlit.
- Completing sequence in order lights middle hole at top of main playfield, lights side kicker for Extra Ball and lights lower level hole for Special.

ADDITIONAL SCORING

- 10-point siwtches on all levels score 30 points.
- Pop bumpers on all levels score 1,000 points (3-Ball) or 100 points (5-Ball).

GOTTLIEB®

V. SOUND/SPEECH BOARD (A6)

The Sound/SpeechBoard installed in this game has not been programmed for speech and will produce sounds only. Please note that the voice chip (U 14) is not being used and its socket is vacant.

VI. GAME ADJUSTMENTS

A. CONTROL BOARD SWITCH ADJUSTMENTS

There are 32 switches on the control board which permit adjustment of the game parameters. These switches are contained in four packages of eight switches each, as shown below:

S1-S8 S9-S16 S17-S24 S25-S32

Switch settings are recognized only during normal power-up and when starting the first player of a new game (not when additional players are added).

SWITCHES				COIN CHUTE ADJUSTMENTS
S1	S2	S3	S4	Left Chute
S5	S6	S7	S8	Right Chute
S9	S10	S11	S12	Center Chute

NOTE: FOR GERMAN GAMES ONLY, switches S5-S8 adjust the center chute and switches S9-S12 adjust the right chute.

				COINS/CREDITS
OFF	OFF	OFF	OFF	1/1
OFF	OFF	OFF	ON	1/2
OFF	OFF	ON	OFF	1/3
OFF	OFF	ON	ON	1/4
OFF	ON	OFF	OFF	1/5
OFF	ON	OFF	ON	1/6
OFF	ON	ON	OFF	1/7
OFF	ON	ON	ON	1/8
ON	OFF	OFF	OFF	1/9
ON	OFF	OFF	ON	2/1*
ON	OFF	ON	OFF	2/2*
ON	OFF	ON	ON	2/3*
ON	ON	OFF	OFF	2/4*
ON	ON	OFF	ON	2/5*
ON	ON	ON	OFF	1/1 AND 2/3
ON	ON	ON	ON	3/1*

*NO CREDITS UNTIL LAST COIN IS INSERTED.

SWITCH 13 — **EXTRA CREDITS**
- ON ..... Adds 9 credits to center coin chute setting
- OFF ..... No effect

NOTE: FOR GERMAN GAMES ONLY, Switch 13 adds 9 credits to the RIGHT coin chute setting, when ON.

SWITCH 14 — **COIN CHUTE CONTROL**
- ON ..... Left and Right Chutes Same
- OFF ..... Left and Right Chutes Separate

NOTE: FOR GERMAN GAMES ONLY, Switch 14 controls the left and CENTER coin chutes.

SWITCHES 15	16	MAXIMUM CREDITS
OFF	OFF	8
OFF	ON	10
ON	OFF	15
ON	ON	25

SWITCH 17 — **BALLS PER GAME**
- ON — 3
- OFF — 5

SWITCH 18 — **MATCH FEATURE**
- ON — ON ✓
- OFF — OFF

SWITCH 19 — **REPLAY LIMIT**
- ON ..... Limits each player to one replay per game
- OFF ..... No replay limit ✓

SWITCH 20 — **NOVELTY MODE**
- ON ..... Playfield SPECIAL and EXTRA BALL features award 50,000 points and 5 knocks. High score, high game to date, and match features disabled
- OFF ..... Normal game mode ✓

NOTE: **SWITCH 20** overrides **SWITCH 21.**

SWITCH 21 — **GAME MODE**
- ON ..... Extra Ball
- OFF ..... Replay ✓

NOTE: If **SWITCH 21** is ON, the high game to date and match awards are disabled.

SWITCH 22 — **PLAYFIELD SPECIAL**
- ON ..... Awards Extra Ball
- OFF ..... Awards Special ✓

SWITCHES 23	24	HIGH GAME TO DATE
OFF	OFF	Not displayed-no award
OFF	ON	Displayed-no award
ON	OFF	Displayed-awards 2 replays
ON	ON	Displayed-awards 3 replays

SWITCH 25 — **MUST REMAIN ON**

SWITCH 26 — **MUST REMAIN ON**

SWITCH 27 — **COIN SWITCH TUNE?**
- ON ..... Yes
- OFF ..... No

SWITCH 28 — **CREDITS DISPLAYED?**
- ON ..... Yes
- OFF ..... No

SWITCH 29 — **TILT PENALTY**
- ON ..... Ball in play only
- OFF ..... Game over

SWITCH 30 — **ATTRACT FEATURES**
- ON ..... ON
- OFF ..... OFF

SWITCH 31 — **MUST REMAIN OFF**

SWITCH 32 — BACKGROUND TONE
- ON ..... ON
- OFF ..... OFF

(SEE SECTION VI, B)

GOTTLIEB

B. POST ADJUSTMENTS

None

C. SOUND ADJUSTMENTS

The speaker output is controlled by the potentiometer mounted on the fuse/knocker panel.

Turning the potentiometer counter clockwise will decrease the volume. Turning it clockwise will increase the volume.

The potentiometer is accessible through the front door.

IMPORTANT: Each of the potentiometers installed on the sound/speech board have been factory adusted. The potentiometer settings should never be changed except when performing the recommended calibration procedure.

NOTE: This game has been programmed for sound only.

SWITCH BANK (SB1) SETTINGS:

SB 1-1	USED IN SELF-TEST ONLY.	
SB 1-2	NOT USED.	
SB 1-3	SB 1-4	Attract Mode
OFF	OFF	Disabled
ON	OFF	Every 10 Seconds.
OFF	ON	Every 2 Minutes.
ON	ON	Every 4 Minutes.
SB 1-5	ON	Background Sound enabled.
	OFF	Background Sound disabled.
SB 1-6	NOT USED.	
SB 1-7	NOT USED.	
SB 1-8	NOT USED.	

GOTTLIEB®

D. TRAP DOOR ADJUSTMENT

NOTE. White-lube should be used to lubricate Bracket C.

Adjust the TRAP DOOR so that it is flush to 1/64th f an inch above the surface of the PLAYFIELD by bending BRACKET A in the proper direction.

Adjust BRACKET B so that its LEADING EDGE is 1/8th to 1/4th of an inch to the left of the 45-DEGREE BEND found at the right of BRACKET C. This can be done by loosening the 2 MOUNTING SCREWS and moving BRACKET D in the appropriate direction.

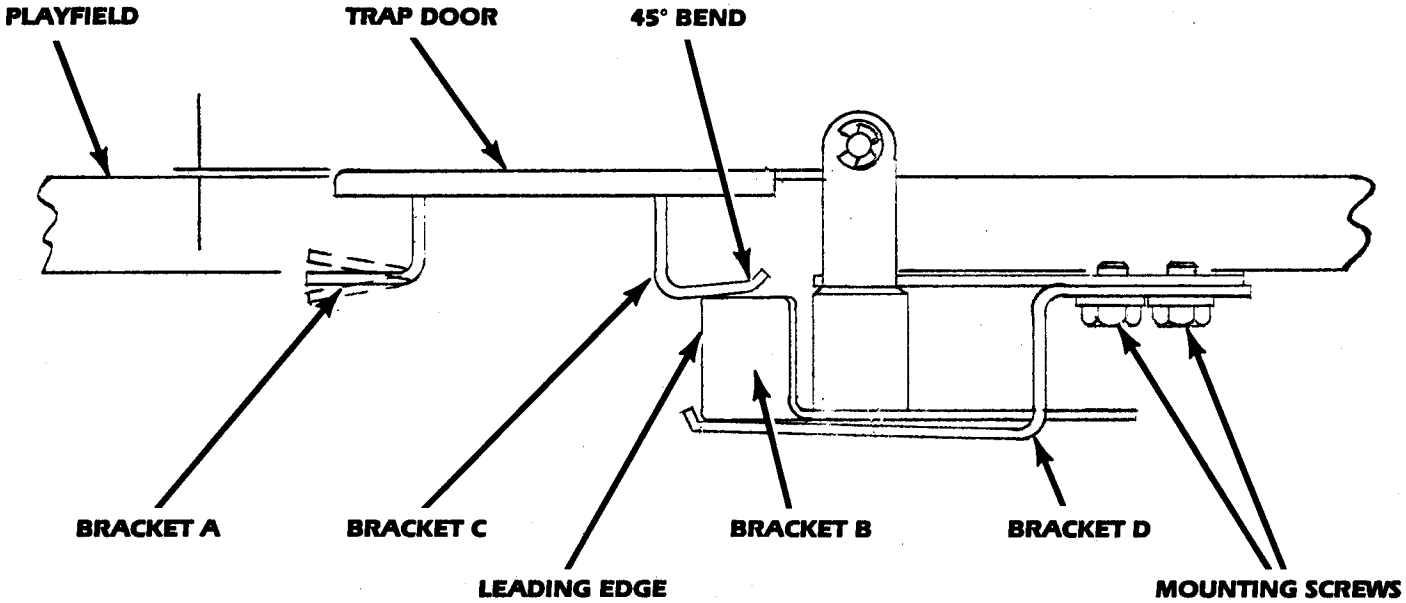

E. KICKING TARGET ADJUSTMENT

Push the PLUNGER down until it "bottoms out" in the coil HOUSING. Push the TARGET FACE in the direction of the arrow shown until it makes contact with the vertical leg of the KICKER CAM. The vertical leg of the cam is located behind the kicking target and is not shown.

Observe that the gap between the SWITCH contacts is at least 1/32nd of an inch. If not, bend the switch's BACKING BLADE in the proper direction.

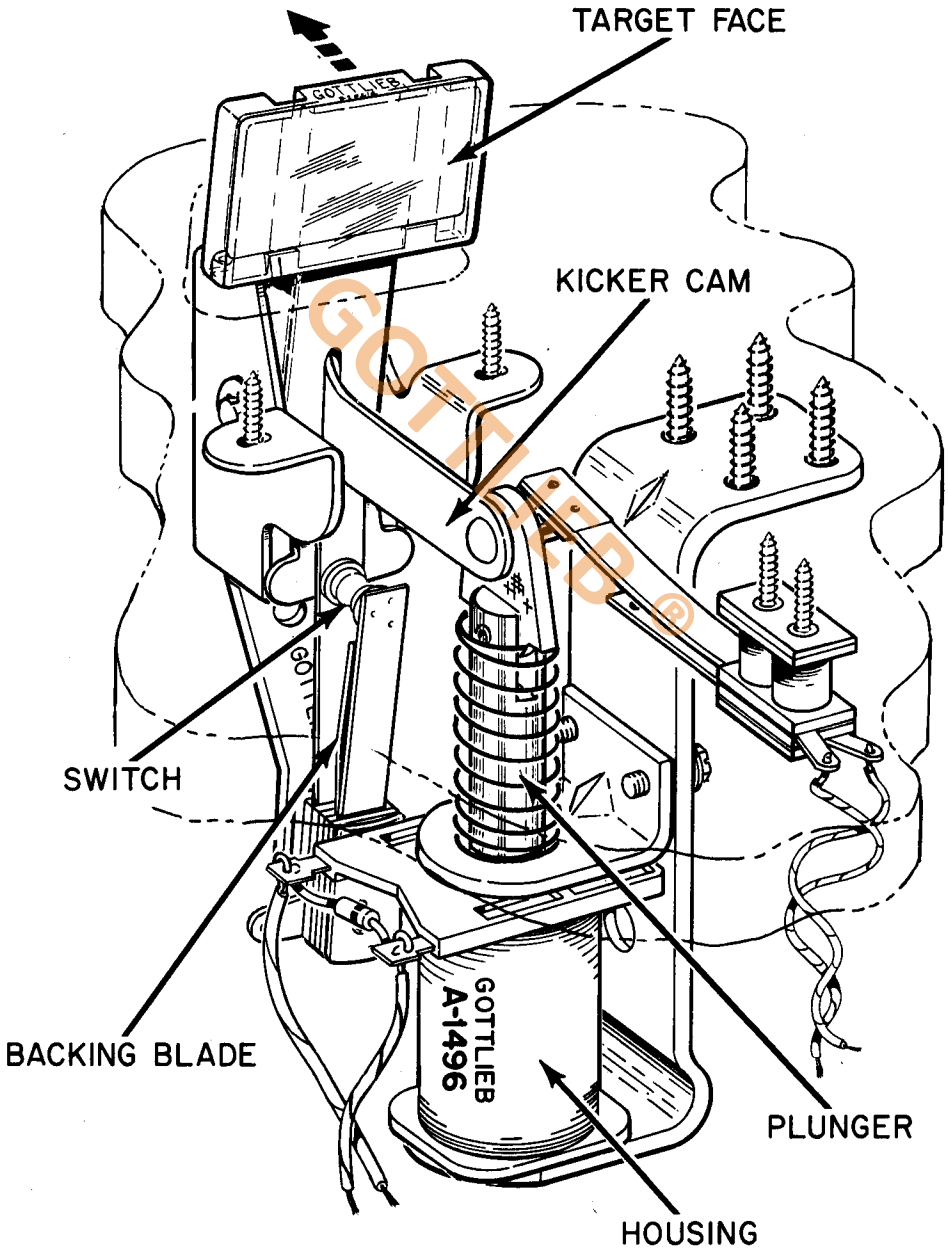

GOTTLIEB®

F. UPPER PLAYFIELD TUBE ADJUSTMENT

The tube must be adjusted so that the ball will fall freely into the tube from any direction

When necessary this adjustment can be accomplished by completing the following procedure:

1. Raise the front end of the playfield (see section 1, upper playfield removal) high enough so that the tube clamp screw is accessible.
2. Loosen the clamp screw.
3. Adjust the tube accordingly.
4. Tighten the tube clamp screw.
5. Replace and secure the upper playfield.

G. LOWER/MIDDLE PLAYFIELD TUBE ADJUSTMENT

This tube must be adjusted so that the ball will rise freely into the tube.

The tube can be adjusted by loosening the tube bracket screws and moving the tube bracket (located on the lower playfield) in the proper direction.

After completing the adjustment always be sure that the tube bracket screws have been retightened.

GOTTLIEB ©

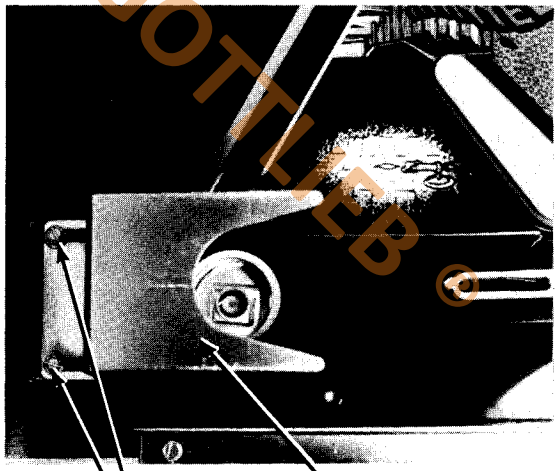

VII. BOOKKEEPING AND SELF TEST

The circuitry in this game helps the operator perform many bookkeeping and game test functions. The information is shown one step at a time in the first player's score display, while the step number is shown in the credit display (refer to flow chart Section VII, C for order and function).

- All bookkeeping information is checked against itself to insure that it is correct. If any data is invalid or bad, that information will flash while it is displayed.
- If the SELF-TEST button is not pressed within 60 seconds of each step, the game will return to the attract mode.

A. BOOKKEEPING

- Pressing the SELF-TEST button inside the front door begins the bookkeeping which are steps 01 through 15.
- The data in any of these steps may be reset to zero while it is displayed by pressing the replay button on the front door.
- THE SELF-TEST BUTTON MUST THEN BE PRESSED TO ENTER ZERO INTO MEMORY.

B. SELF-TEST

- Steps 16 through 20 are SELF-TEST or game tests the operator can use for quick troubleshooting.
- All the tests are explained in the flow chart (Section VII, D).
- Each test can be repeated by pressing the replay button on the front door. This starts the test for another 60 seconds.
- If the SELF-TEST button or the replay button is not pressed within 60 seconds, the game will return to the attract mode.

GOTTLIEB ®

C. HOW TO RESET HIGH SCORE LEVELS OR HIGH GAME TO DATE SCORES

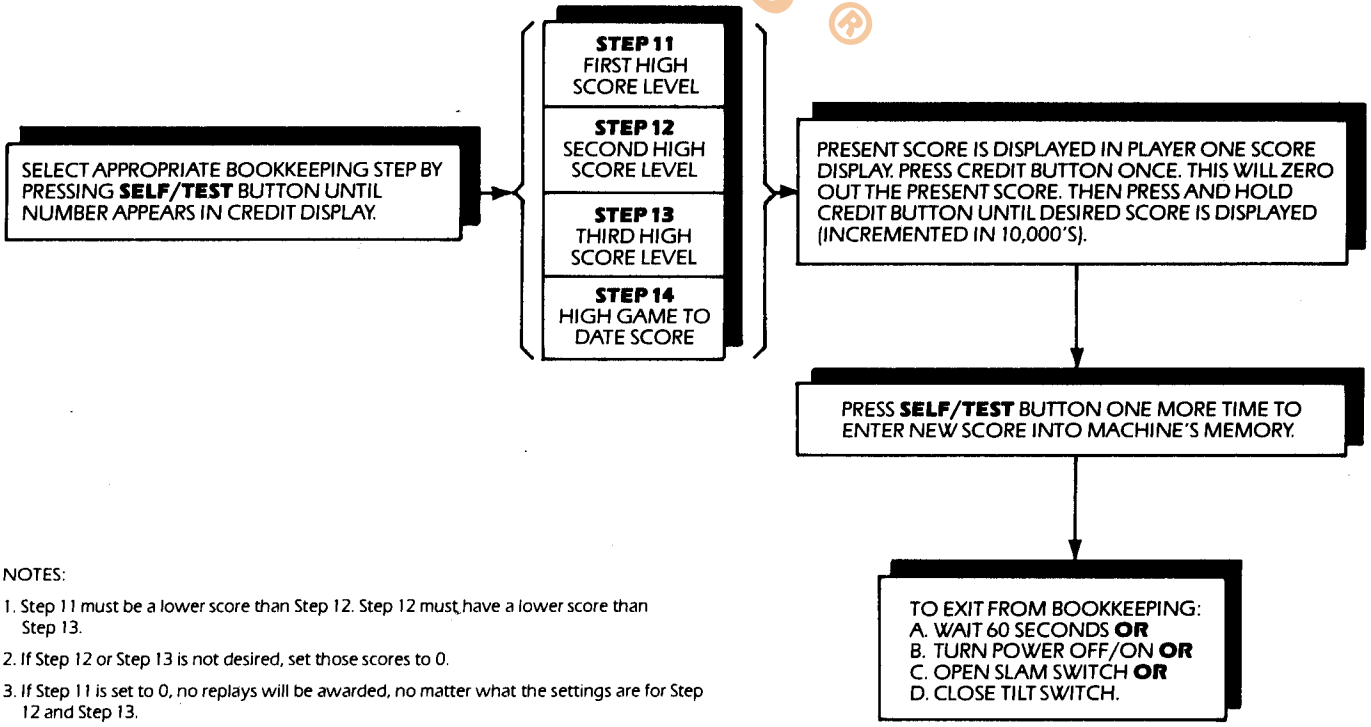

NOTES:

1. Step 11 must be a lower score than Step 12. Step 12 must have a lower score than Step 13.
2. If Step 12 or Step 13 is not desired, set those scores to 0.
3. If Step 11 is set to 0, no replays will be awarded, no matter what the settings are for Step 12 and Step 13.

VII. BOOKKEEPING AND SELF TEST

D. FLOW CHART

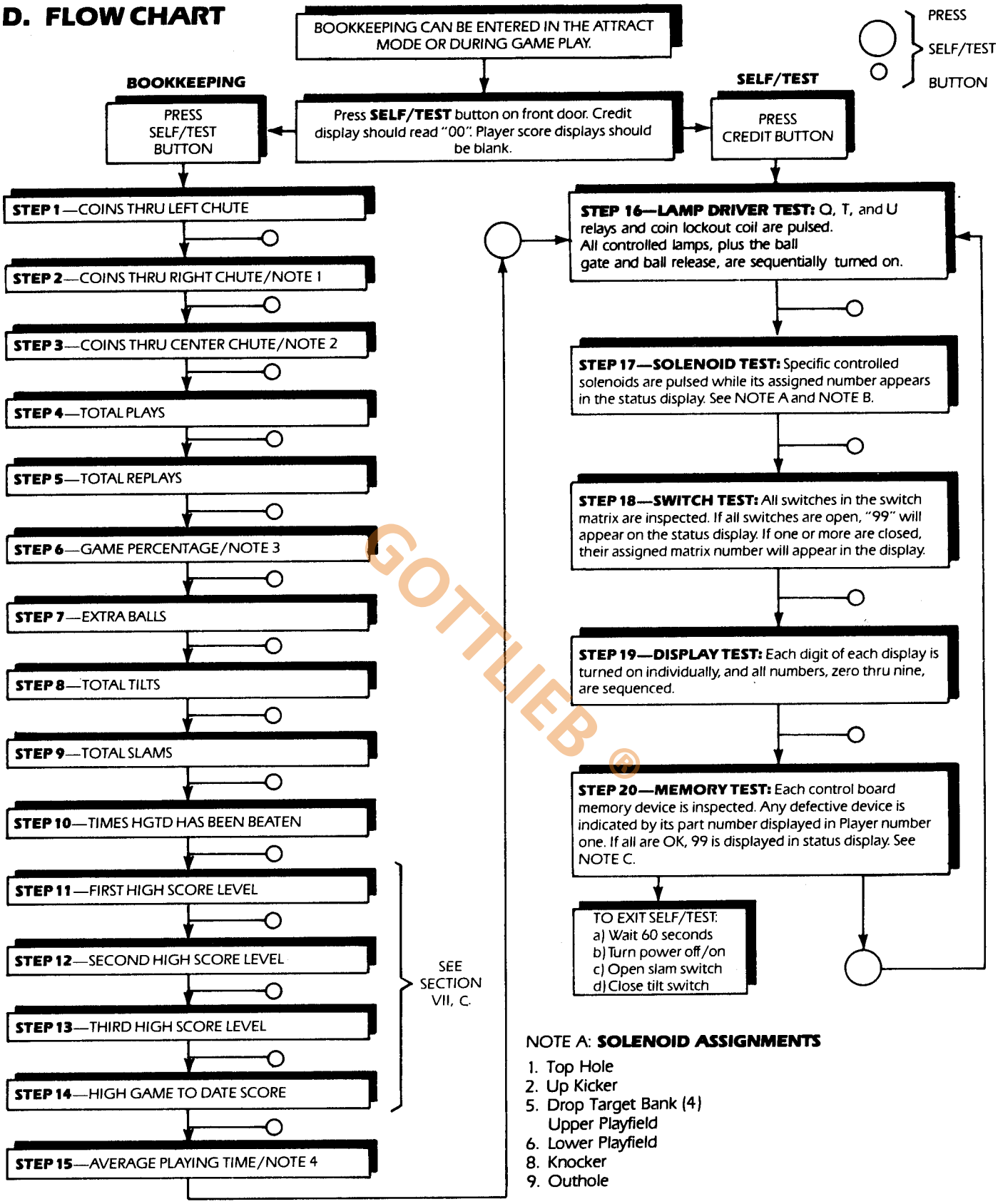

GOTTLIEB ®

NOTE A: **SOLENOID ASSIGNMENTS**

1. Top Hole
2. Up Kicker
5. Drop Target Bank (4) Upper Playfield
6. Lower Playfield
8. Knocker
9. Outhole

1. If control board switch #14 is on, Steps 01 and 02 are added together and displayed in Step 01.
2. IN GERMAN GAMES ONLY, Step 02 displays total coins thru center chute, and Step 03 displays total coins thru right chute.
3. If Step 06 is reset, Steps 04 and 05 must also be reset.
4. If Step 15 is reset, Step 04 must also be reset.

NOTE B: Mechanical coin counters are optional and are not pulsed during solenoid test.

NOTE C: James Bond and later System 80 games will display 7641-1 for a bad 2716 game prom.

NOTE D: FOR GERMAN GAMES ONLY, solenoid #4 is assigned to center coin chute and solenoid #7 is assigned to right coin chute.

VIII. OPTIONS

None

IX. GENERAL INFORMATION

A. PRINTED CIRCUIT BOARDS ARE DESIGNATED AS FOLLOWS:

A1 - Control Board

A2 - Power Supply

A3 - Driver Board

A4 - Score Displays

A5 - Status Display

A6 - Sound/Speech Board

A7 - Sound/Speech Power Supply

A8 - Pop Bumper Driver Boards

A11 - Auxiliary Lamp Driver Board - Lightbox

Printed circuit board connectors will be labeled AX-JX. For example, A3-J4 is the connector J4 on the driver board (A3).

GOTTLIEB ®

B. WIRE COLORS ARE SHOWN AS NUMBERS:

0 Black

1 Brown

2 Red

3 Orange

4 Yellow

5 Green

6 Blue

7 Purple

8 Slate

9 White

For example, 688 is a BLUE-SLATE-SLATE striped wire.

IX. GENERAL INFORMATION

C. FUSES

FUSE PANEL

F1	Sound/Speech Power Supply 12VAC	1/2 Amp
F2	Power Supply 10VAC	5 Amp SLO-BLO
F3	Displays 60VAC	1/4 Amp SLO-BLO
F4	Solenoids 25VAC	8 Amp SLO-BLO
F5	Controlled Lamps 8VAC	7½ Amp
F6	Playboard Illumination 6.3VAC	7½ Amp SLO-BLO
F7	Light Box 6.3VAC	7½ Amp SLO-BLO
F8	Sound/Speech Power Supply 24VDC	1 Amp SLO-BLO

NOTE: F8 is not used in foreign games

MAIN PLAYFIELD

F10	Main Playfield Upper Left Pop Bumper 38VDC	2½ Amp SLO-BLO
F11	Main Playfield Bottom Left Pop Bumper38VDC	2½ Amp SLO-BLO
F12	Upper Playfield Pop Bumper 24VDC	2 Amp SLO-BLO
F13	Lower Playfield Pop Bumper 24VDC	2 Amp SLO-BLO
F14	Main Playfield Up Kicker,Right Side Kicker and Trap Door 24VDC	2½ Amp SLO-BLO
F15	Main Playfield-Out Hole, Top Hole and Lower Playfield Hole 24VDC	2 Amp SLO-BLO

NOTE: All fuses are located on the main playfield.

GOTTLIEB ®

D. COIL CHART

SOLENOID COILS

PART NUMBER	GENERAL USAGE*	RESISTANCE (ohms)	NUMBER OF TURNS	WIRE GAUGE	WRAPPER COLOR
A-1496	KICKING TARGET KICKING RUBBERS POP BUMPERS	2.95	635	#23	Yellow
A-4893	UP KICKER POP BUMPERS BALL KICKER	2.1	535	#22	Red
A-5194	UP KICKER GONG KICKING TARGETS	4.5	780	#24	Blue
A-5195	CONTACT KICKER KNOCKER HOLE KICKER	12.3	1305	#26	White
A-16570	HOLE KICKER, OUTHOLE	15.5	1450	#27	Green
A-17875	FLIPPERS	2.8/40.0	560/1100	#24/31	Yellow
A-17891	5 BANK RESET	3.35	850	#22	White
A-18102	3 BANK RESET, 7 BANK RESET USES 2	9.0	1430	#24	Red
A-18318	4 BANK RESET	6.7	1130	#24	Orange
A-19300	BALL KICKER	7.8	1075	#25	Orange
A-20095	SUPER FLIPPER	1.55/35.5	450/900	#22/31	Red
RELAY COILS					
A-16890	Q, T, AND COIN LOCKOUT RELAYS	231.0	4000	#35	Orange
A-20558	GATE RELAY	156.0	3400	#34	White
A-18642	MEMORY/ DROP TARGETS	58.0	1590	#33	White

*Coils may vary from game to game. Check game manual for exact coil usage.

GOTTLIEB ®

E. SOUND/SPEECH BOARD (A6) TEST

1. Game must be in game over mode to initiate test.
2. Pressing the test button on the sound board will initiate the test.
3. The test must be completed to enable the sound board or game power must be turned on/off.

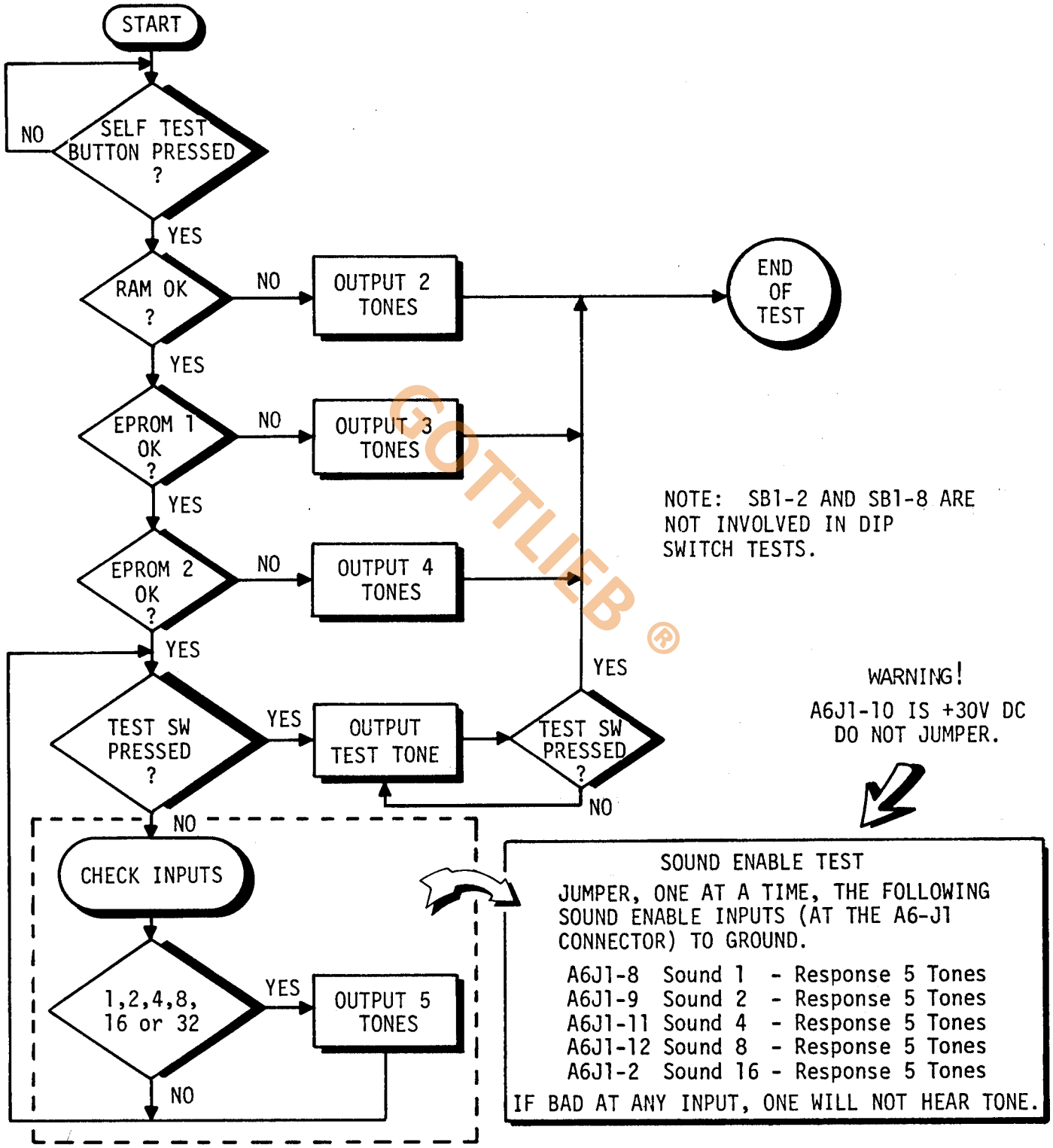

GOTTLIEB ®

X. WIRING AND SCHEMATIC DIAGRAMS, PARTS LISTS

TABLE OF CONTENTS

PAGE

CONTROL BOARD (A1)
- COMPONENT LOCATION AND PARTS LIST 20
- SCHEMATIC DIAGRAM 21

DRIVER BOARD (A3)
- COMPONENT LOCATION AND PARTS LIST 24
- SCHEMATIC DIAGRAM 25

SPEECH/SOUND BOARD (A6)
- COMPONENT LOCATION AND PARTS LIST 27
- SCHEMATIC DIAGRAM 28

AUXILIARY LAMP DRIVER BOARD (A11)
- COMPONENT LOCATION AND PARTS LIST 30
- SCHEMATIC DIAGRAM 30

LIGHT BOX WIRING 31

6-DIGIT DISPLAY (A4)
- COMPONENT LOCATION AND PARTS LIST 33
- SCHEMATIC DIAGRAM 33

4-DIGIT DISPLAY (A5)
- COMPONENT LOCATION AND PARTS LIST 34
- SCHEMATIC DIAGRAM 34

PLAYBOARD
- UPPER/LOWER PLAYBOARD SWITCH AND LAMP ASSIGNMENTS 35
- MIDDLE PLAYBOARD SWITCH AND LAMP ASSIGNMENTS 36
- PLAYBOARD SWITCH MATRIX 37
- PLAYBOARD ILLUMINATION AND SOLENOIDS 38

SOUND/SPEECH BOARD POWER SUPPLY (A7)
- COMPONENT LOCATION AND PARTS LIST 40
- SCHEMATIC DIAGRAM 40

BOTTOM BOARD AND CABINET SCHEMATIC 41

POWER SUPPLY (A2)
- COMPONENT LOCATION AND PARTS LIST 43
- SCHEMATIC DIAGRAM 44

POP BUMPER DRIVER BOARD (A8)
- COMPONENT LOCATION AND PARTS LIST 45
- SCHEMATIC DIAGRAM 45

GOTTLIEB ®

X. WIRING AND SCHEMATIC DIAGRAMS, PARTS LISTS

CONTROL BOARD (A1) COMPONENT LOCATION

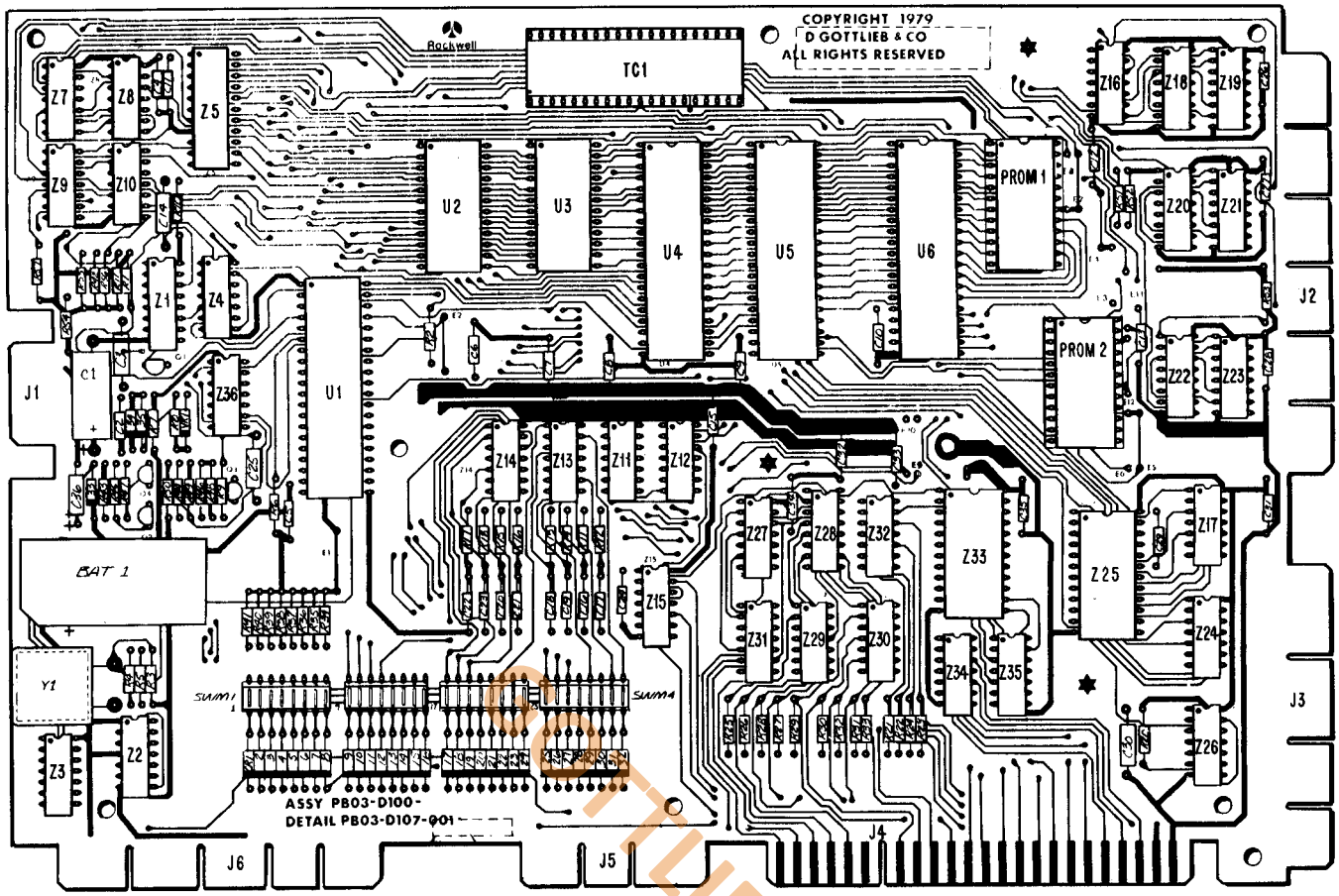

CONTROL BOARD (A1) PARTS LIST

REFERENCE	DESCRIPTION	PART NUMBER
BAT.1	Battery—3.6V	326R10-002
C1	Capacitor, 100 mfd., 10V	
C2, C4-C13, C15-C24, C26-C29, C31-C35	Capacitor, .01 mfd., 50V	
C3, C14, C25, C30	Capacitor, .1 mfd., 50V	
C36	Capacitor, 10 mfd.	10V.TNT
CR1-CR35	Diode, GP	1N4148
Q1, Q4	Transistor—PNP	MPS-A70
Q2, Q3	Transistor, NPN (Motorola)	2N440
R1, R6, R11-R24, R42, R45, R46, R48, R51-R57	Resistor, 3.0K ohm, 5%, 1/4W	
R2, R34-R41	Resistor, 4.7K ohm, 5%, 1/4W	
R3, R43, R49	Resistor, 5.6K ohm, 5%, 1/4W	
R4, R5, R44	Resistor, 2.0K ohm, 5%, 1/4W	
R7	Resistor, 62 ohm, 5%, 1/4W	
R8, R50	Resistor, 180 ohm, 5%, 1/4W	
R9	Resistor, 1K ohm, 5%, 1/4W	
R10	Resistor, 2.8M ohm, 5%, 1/4W	
R25-R33	Resistor, 620 ohm, 5%, 1/4W	
R47	Resistor, 24K ohm, 5%, 1/4W	
SW1-SW4	Dip Switch Pak—8 Position	341R31-005
TC1	Socket, 40 Pin	640379-3
U1	CPU	R6502-13
U2	ROM	R3273-12

REFERENCE	DESCRIPTION	PART NUMBER
U3	ROM	R3272-12
U4, U5, U6	RIOT	R6532-18
VR1	Zener Diode—3.0V, 5%	1N5225B or 1N5987B
Y1	Crystal, 3.579545 MHZ	333R08-001
Z1	IC-CMOS—Dual 1 Shot	SCL4528B
Z2	IC—Dual Flip Flop	SN7474N
Z3, Z11, Z12, Z16, Z17, Z24, Z26, Z27, Z34, Z35	IC—Hex Inverter	SN7404N
Z4	IC-CMOS—Quad 2 Input "AND"	SCL4081B
Z5	IC-Static Ram	S5101-L
Z7	IC—Hex Inverter	SN74LS04N
Z8	IC—2 Input "NOR"	SN7402N
Z9, Z13, Z14	IC—2 Input "NAND"	SN7400N
Z10	IC—Open Collector Inverter	SN74LS05N
Z15	IC—2 Input—"OR"	SN7432N
Z18, Z20 Z22	IC—"D" Flip Flop	SN74175N
Z19, Z21, Z23	IC—4 to 7 Decoder	SN7448N
Z25, Z33	IC—4 to 16 Decoder	SN74154N
Z28	IC—2-to-4 Decoder	SN74LS139N
Z29, Z30	IC—Hex Inverter—OC/HV	SN7416N
Z31	IC—2 Input "AND"	SN7408N
Z32	IC—Hex Buffer—OC	SN7417N
Z36	IC—CMOS	MM74C04 or SCL4069B
	Socket—DIL, 24 PIN	640361-3
	Spacer, Cork	131R06-001

GOTTLIEB®

NOTE: UNLESS OTHERWISE INDICATED;
1. RESISTORS ARE ±5%, 1/4W.
2. CAPACITORS ARE .01UF, 50V.
3. DIODES ARE TYPE IN4148.
4. REF. DESIGNATION Z6 NOT USED.

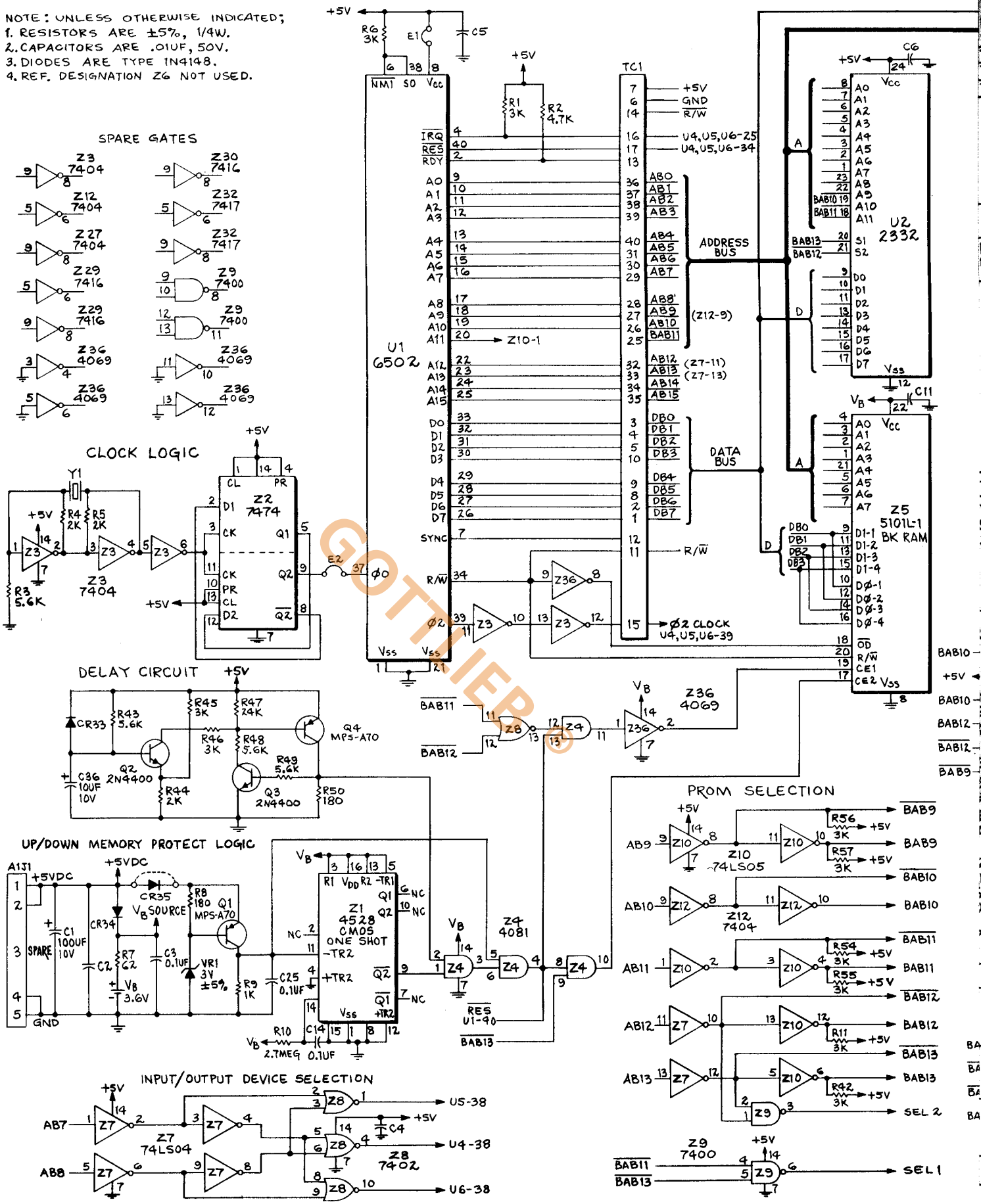

GOTTLIEB®

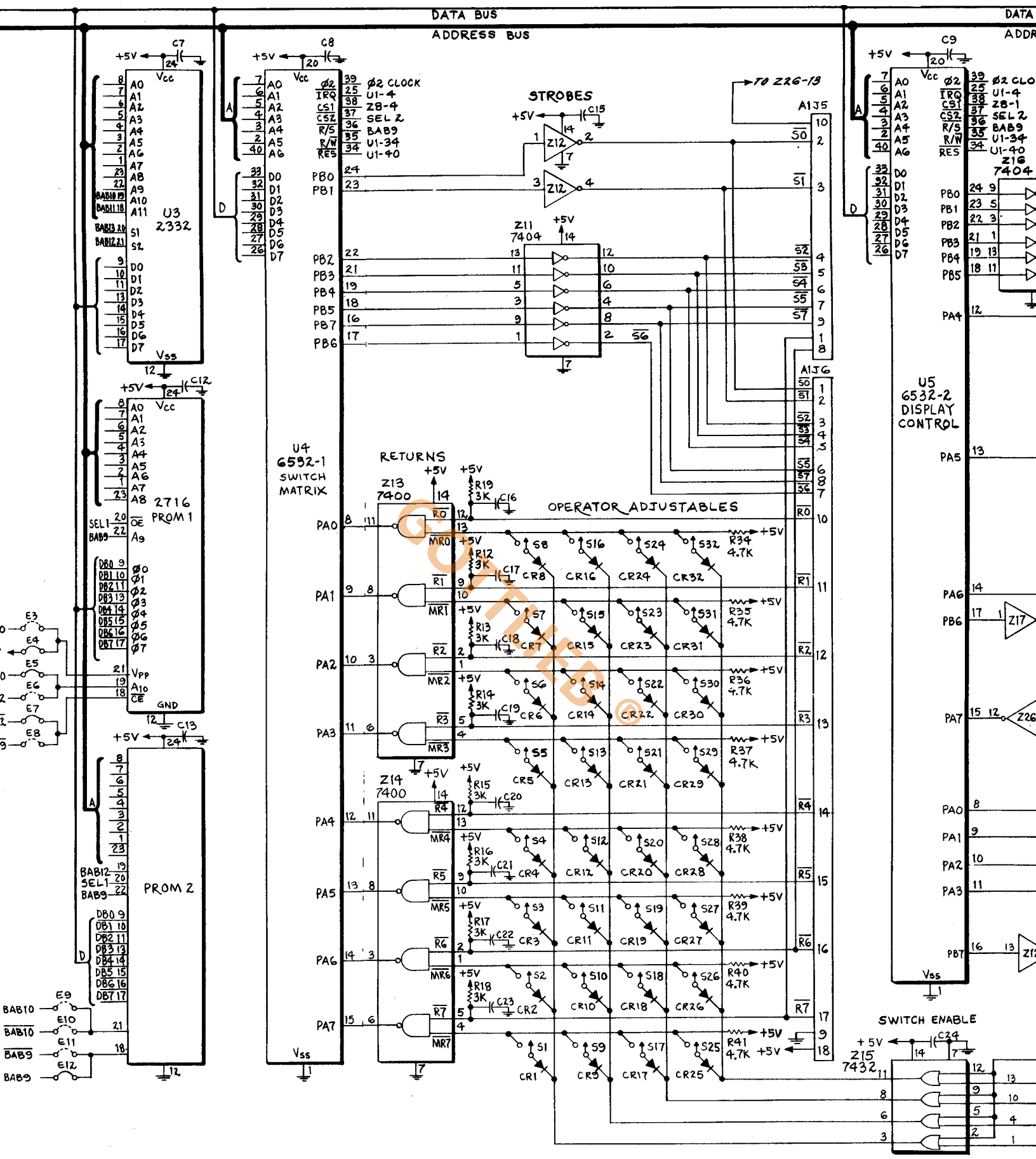
DATA BUS
ADDRESS BUS
U3
2332
U4
6532-1
SWITCH
MATRIX
U5
6532-2
DISPLAY
CONTROL
2716
PROM 1
PROM 2
STROBES
RETURNS
OPERATOR ADJUSTABLES
SWITCH ENABLE
Z13
7400
Z14
7400
Z11
7404
Z15
7432
A1J5
A1J6
TO Z26-13
Ø2 CLOCK
U1-4
Z8-4
SEL 2
BAB9
U1-34
U1-40
Z8-1
Z16
7404
+5V
Vcc
Vss
GND

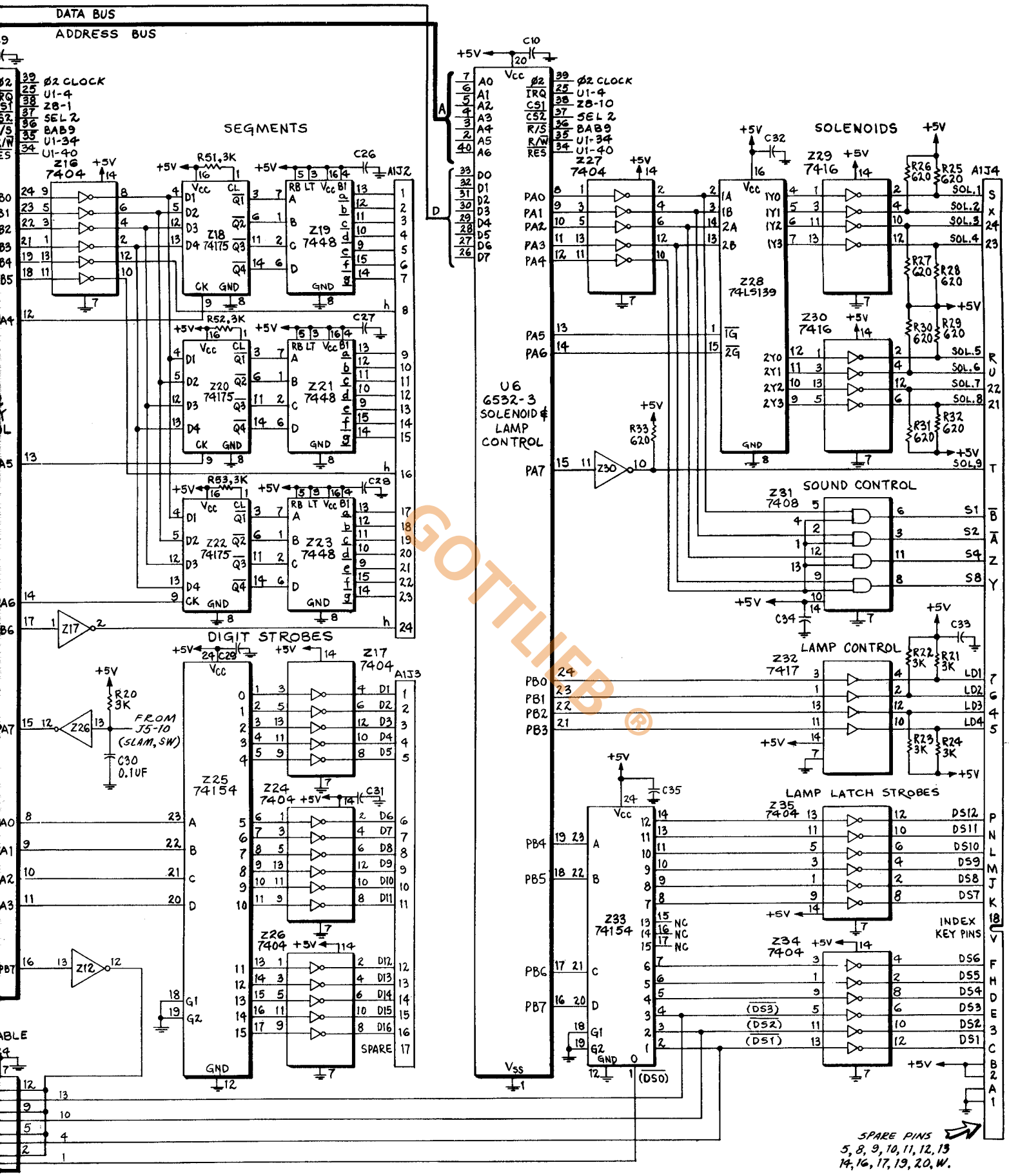

D. GOTTLIEB & CO.			
TITLE	CONTROL BOARD (A1)		
USED ON	SYSTEM 80		
DRAWN G.P.20.	APPROVED BAM	DATE 12-20-80	E-20916

DRIVER BOARD (A3) COMPONENT LOCATION

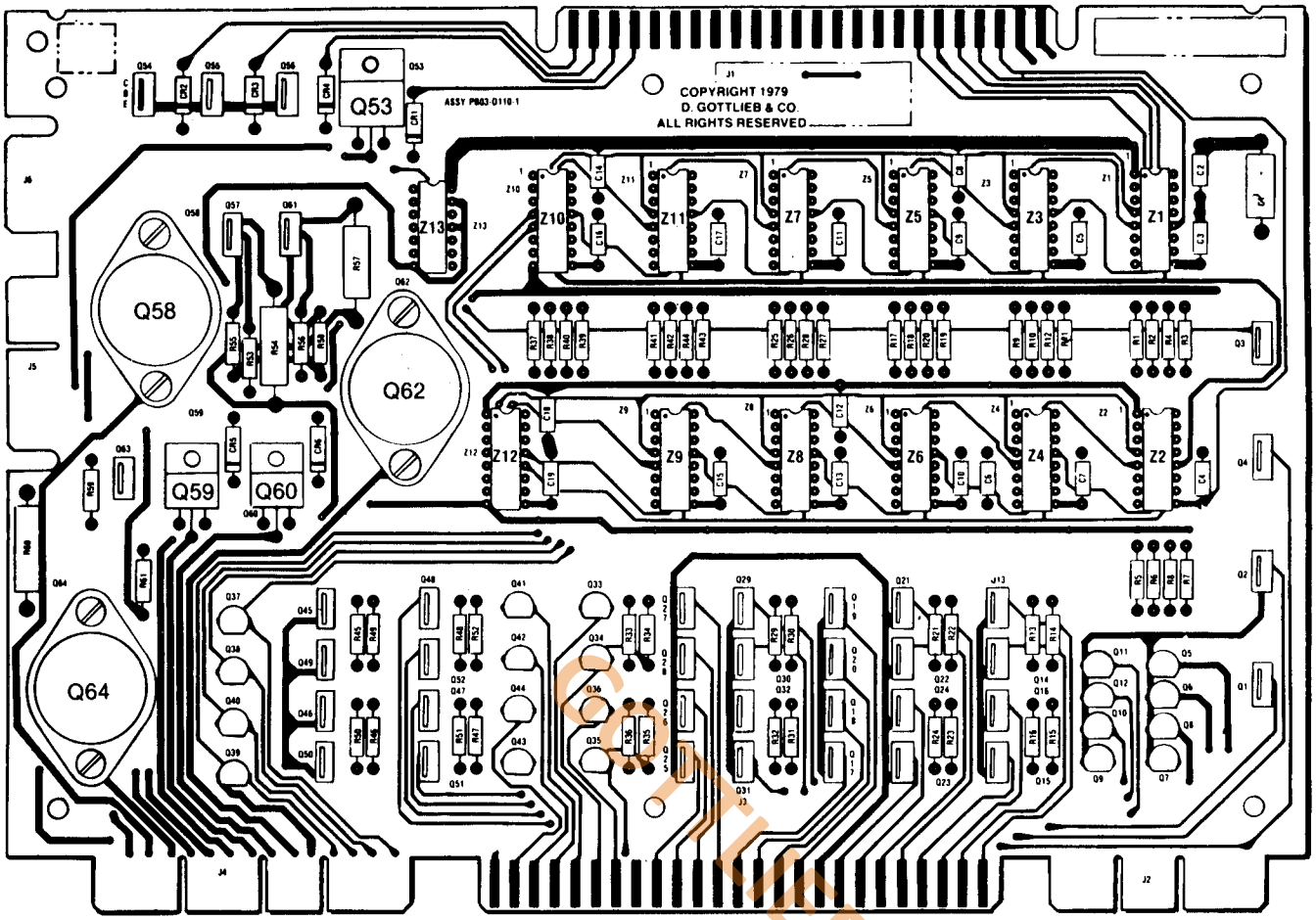

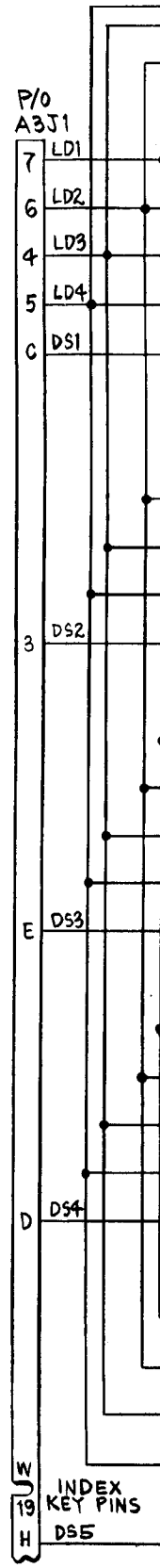

DRIVER BOARD (A3) PARTS LIST

REFERENCE	DESCRIPTION	PART NUMBER
C1	Capacitor, 10 mfd., 10V—Tantalum	
C2-C19	Capacitor, .01 mfd., 50V	
CR1-CR6	Diode—Silicon	1N4148
R1-R53, R61, R55, R56, R58, R59	Resistor, 1000 ohm, 5%, 1/4W	
R54, R57, R60	Resistor, 9.1 ohm, 5%, 1W	
Q1-Q4, Q13-Q32, Q45-Q52, Q54-Q57, Q63	Transistor, NPN, Darlington	MPS-U45
Q5-Q12, Q33-Q44	Transistor, NPN, Darlington	MPS-A13
Q53, Q59, Q60	Transistor, NPN, Darlington	2N6043
Q58, Q62, Q64	Transistor, NPN	2N3055
Z1-Z12	I.C. Quad "D" Latch Flip Flop	SN74175N
Z13	I.C. Hex Inverter	SN7404N
	Insulator—Thermalloy	43-03-4

GOTTLIEB ®

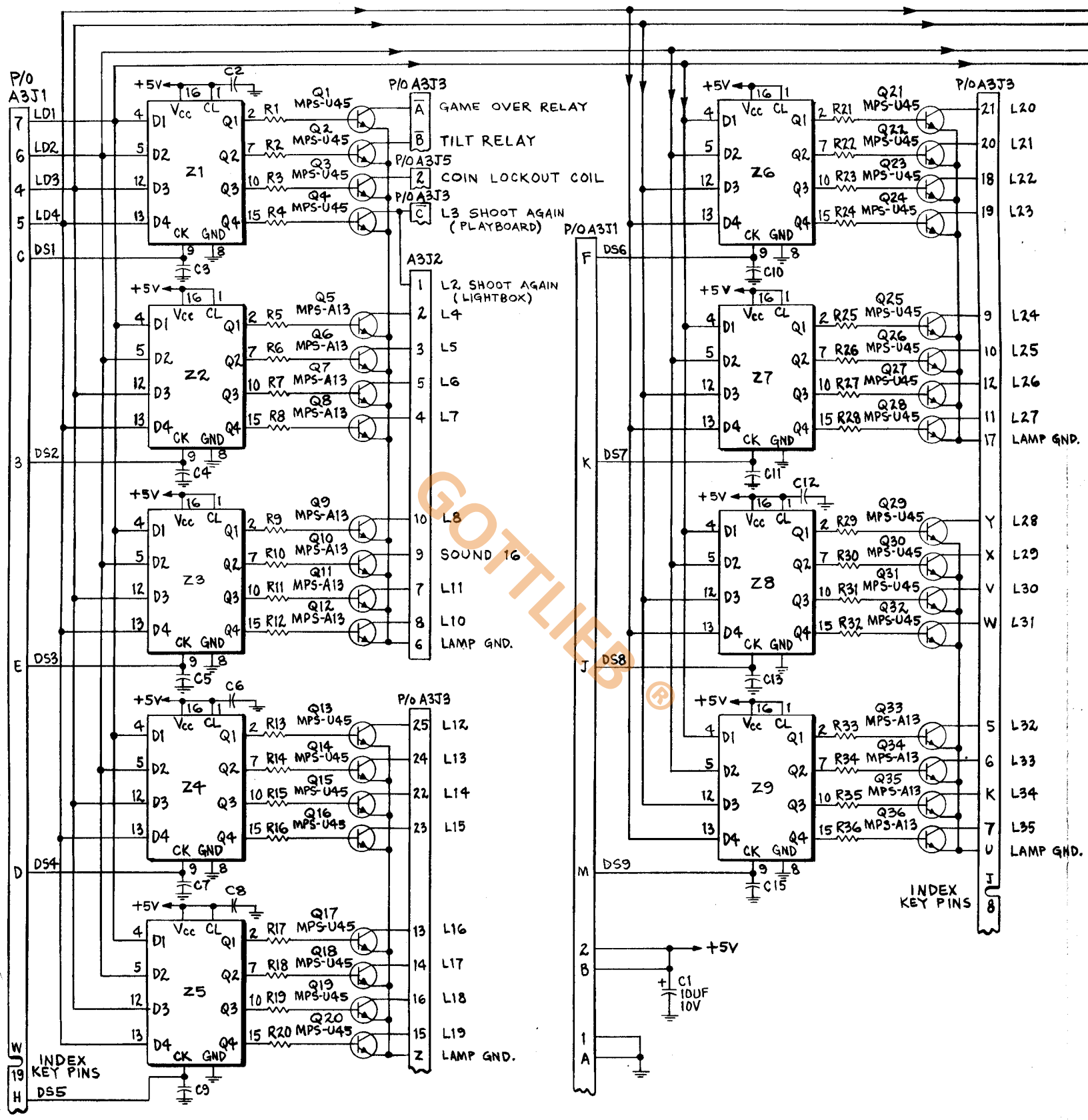
P/O A3J1
LD1
LD2
LD3
LD4
DS1
DS2
DS3
DS4
DS5
INDEX KEY PINS
P/O A3J3
GAME OVER RELAY
TILT RELAY
P/O A3J5
COIN LOCKOUT COIL
P/O A3J3
L3 SHOOT AGAIN (PLAYBOARD)
A3J2
L2 SHOOT AGAIN (LIGHTBOX)
L4
L5
L6
L7
SOUND 16
L8
L11
L10
LAMP GND.
L12
L13
L14
L15
L16
L17
L18
L19
LAMP GND.
P/O A3J1
DS6
DS7
DS8
DS9
+5V
C1 10UF 10V
L20
L21
L22
L23
L24
L25
L26
L27
LAMP GND.
L28
L29
L30
L31
L32
L33
L34
L35
LAMP GND.
INDEX KEY PINS
Z1
Z2
Z3
Z4
Z5
Z6
Z7
Z8
Z9
Vcc
CL
D1
D2
D3
D4
CK
GND
Q1
Q2
Q3
Q4
MPS-U45
MPS-A13

GOTTLIEB®

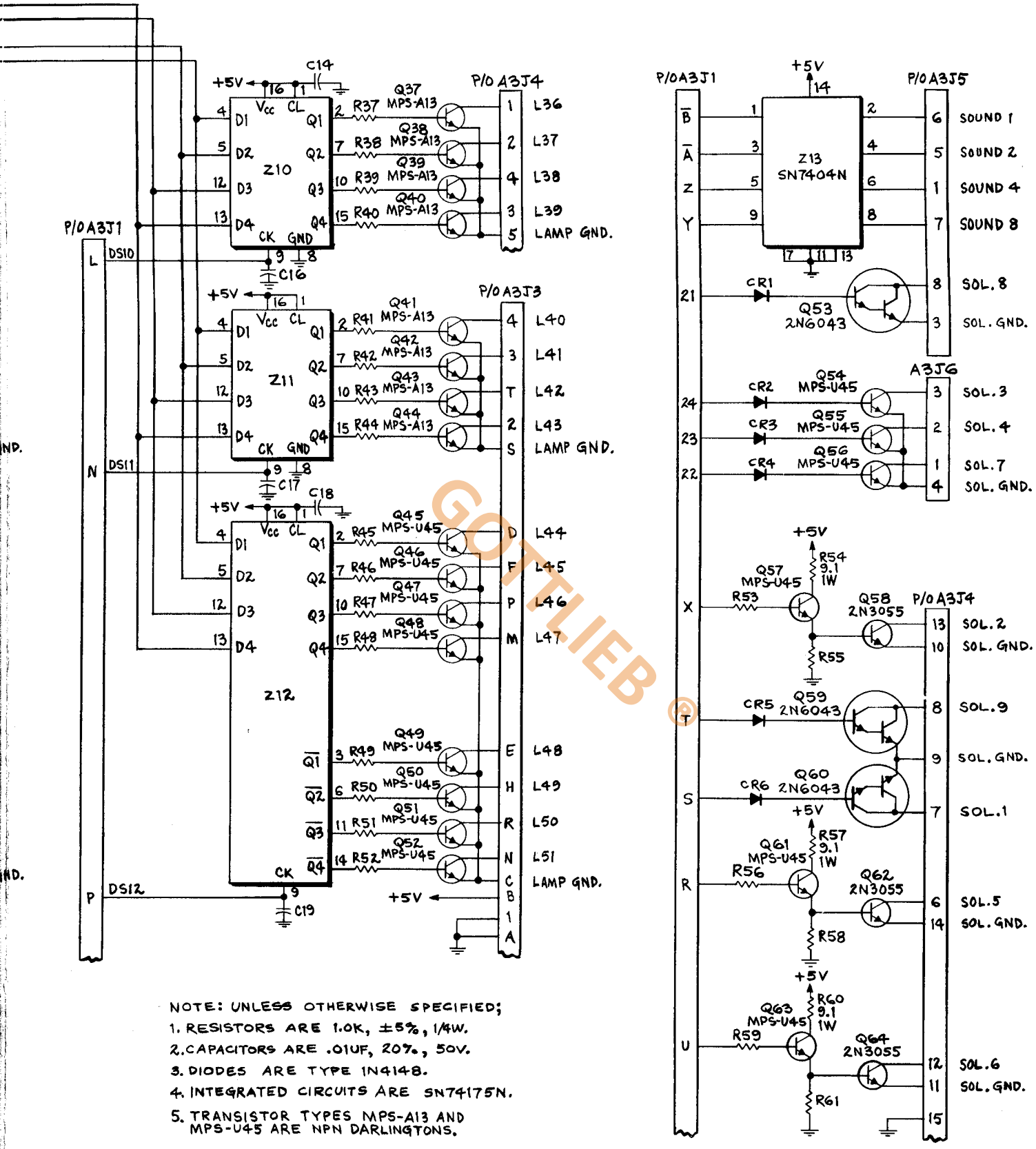

NOTE: UNLESS OTHERWISE SPECIFIED;
1. RESISTORS ARE 1.0K, ±5%, 1/4W.
2. CAPACITORS ARE .01UF, 20%, 50V.
3. DIODES ARE TYPE 1N4148.
4. INTEGRATED CIRCUITS ARE SN74175N.
5. TRANSISTOR TYPES MPS-A13 AND MPS-U45 ARE NPN DARLINGTONS.

D. GOTTLIEB & CO.			
TITLE / USED ON	DRIVER BOARD (A3) SYSTEM 80		
DRAWN	APPROVED	DATE	E-20915
G.P.D.	BAM	12-12-80	

GOTTLIEB ®

X. WIRING AND SCHEMATIC DIAGRAMS, PARTS LISTS

SOUND/SPEECH BOARD (A6) COMPONENT LOCATION

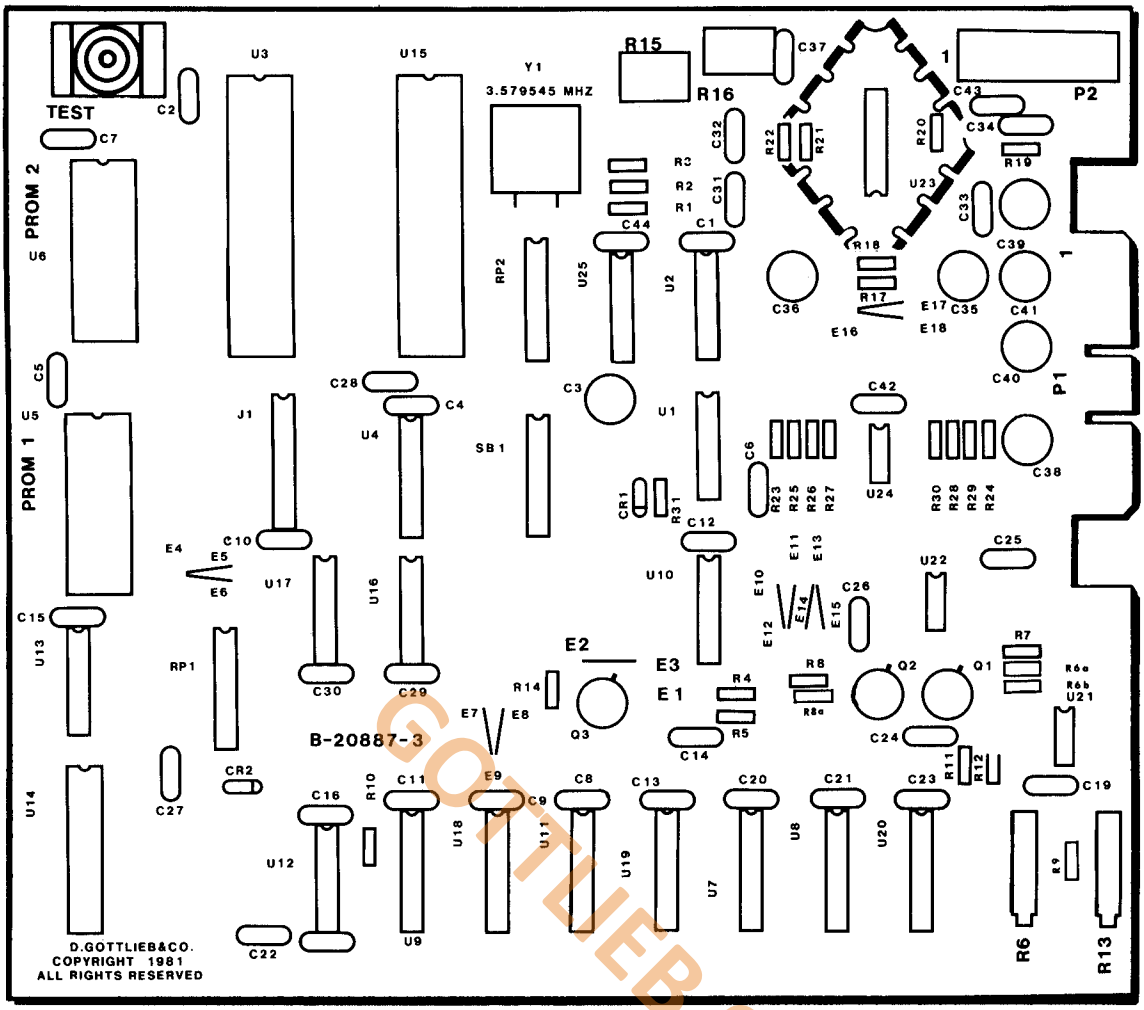

GOTTLIEB®

SOUND/SPEECH BOARD (A6) PARTS LIST

REFERENCE	DESCRIPTION	PART NUMBER
C1, C2	Capacitor, .1 UF 25V, CMD	
C4-C13, C15, C16, C19, C20, C21, C23, C25, C26, C29, C30		
C28		
C31-C32 C42, C44	Capacitor, 0.05 MF, 25V, CMD	
C37	Capacitor, 4.7 MF, 25V Tantalum	
C3, C38-C41	Capacitor, 47 MF, 50V	
C14, C24	Capacitor, 100 PF, 250V, 20%	
C22	Capacitor, 300 PF, CMD	
C27	Capacitor, 1 UF, 50V, TNT	
C36	Capacitor, 470 MF, 35V	
CR1	Diode	1N4148
CR2	Diode, Zener	1N5225B
Q1, Q3	Transistor, NPN	2N2222A
Q2	Transistor, PNP	2N2907A
R1, R4, R5, R11, R12	Resistor, 5.6K ohm, 1/4W	
R2, R3	Resistor, 2K ohm, 1/4W, 5%	
R6, R13	Potentiometer, 10K, Bourns	3006-103
R7	Resistor, 10K ohm, 1/4W, 5%	
R8, R8A, R14	Resistor, 1K ohm, 1/4W, 5%	
R6A, R6B	Resistor, 1.8K ohm, 5%, 1/4 watt	
R9	2.2K ohm, 5%, 1/4W	
R10	Resistor, 1.5K ohm, 1/4W, 5%	
R15, R16	Potentiometer, 10K, CTS	X201R

REFERENCE	DESCRIPTION	PART NUMBER
R18, R21	Resistor, 100K ohm, 1/4W	
R22	Resistor, 2K ohm, 1/4W, 5%	
R23-R30	Resistor, 10K ohm, 1/4W	
R31	Resistor, 3.3K ohm, 1/4W, 5%	
RP1, RP2	Resistor, Dip	4116R-002-222
SB1	Dip Switch	1008-692
SW1	Moment Pushbutton Switch	
U1	IC, Trigger	7414
U2	IC	SN74LS74N
U3	CPU	R6502-13
U4	IC	SN74LS138N
U5, U6	E Prom	2716
U7-U9, U11, U18	IC	SN74L75
U10	IC	SN74LS02N
U12	IC	SN7407N
U13	IC, Inverter	SN74LS05N
U14 not used	Voice Chip	SC01
U15	RRIOT	R6532-18
U16	IC	SN74LS04N
U17	IC	SN74LS30N
U19, U20	Converter, PMI	1408A-6P
U21, U22	IC	LM741CP
U23	IC	LM379S
U24	IC, Dual Comparitor	LM193
U25	Inverter	7404
Y1	Crystal, 3.579545 MHZ	
	Socket 22 Pin Dip	
	Socket 24 Pin (2)	640361-3
	Socket 40 Pin (2)	640379-3

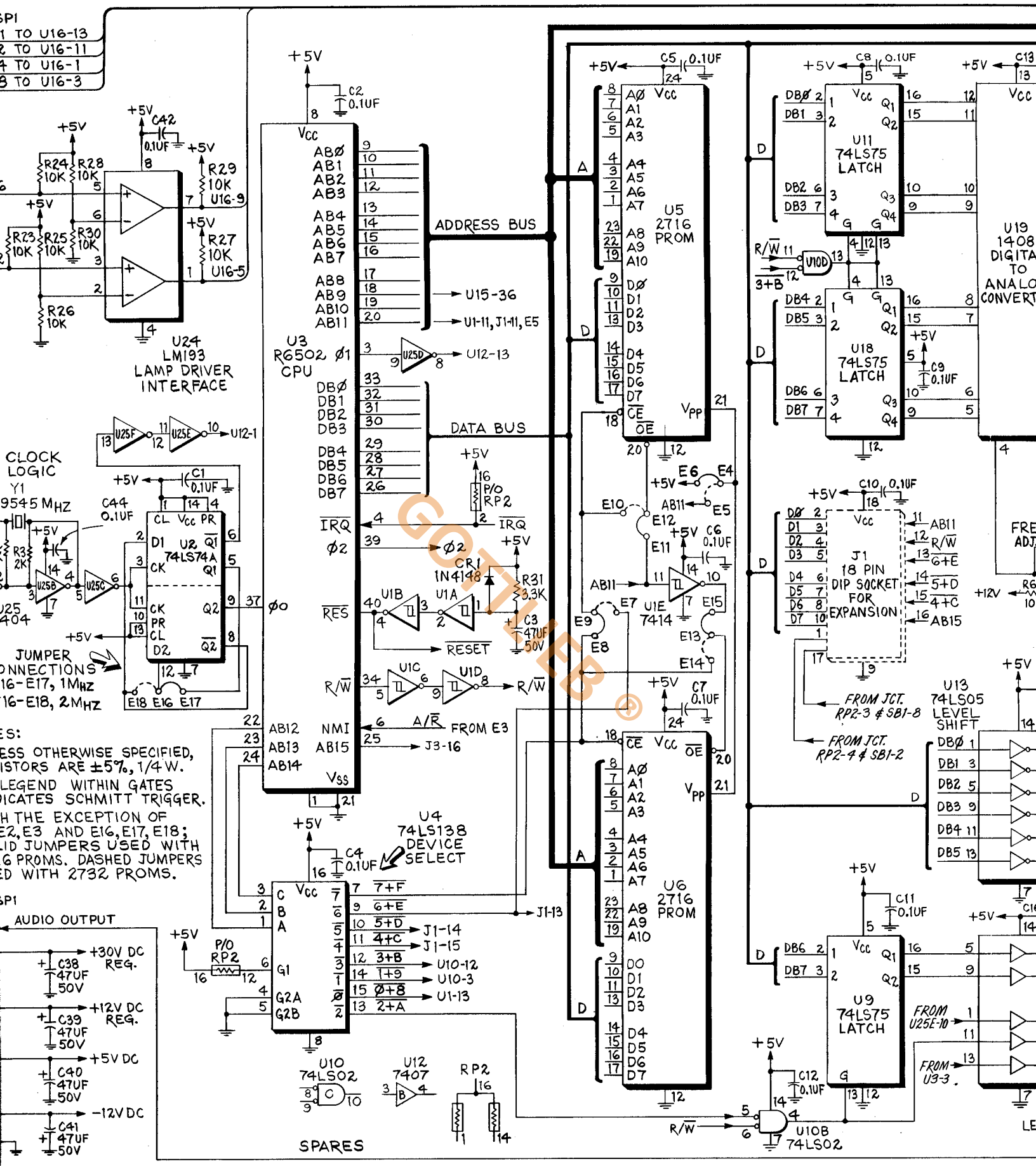
SP1
1 TO U16-13
2 TO U16-11
4 TO U16-1
3 TO U16-3
U24
LM193
LAMP DRIVER
INTERFACE
CLOCK
LOGIC
Y1
9545 MHZ
JUMPER
ONNECTIONS
16-E17, 1MHZ
16-E18, 2MHZ
ES:
ESS OTHERWISE SPECIFIED,
ISTORS ARE ±5%, 1/4 W.
LEGEND WITHIN GATES
DICATES SCHMITT TRIGGER.
H THE EXCEPTION OF
E2, E3 AND E16, E17, E18;
LID JUMPERS USED WITH
6 PROMS. DASHED JUMPERS
ED WITH 2732 PROMS.
SP1
AUDIO OUTPUT
+30V DC REG.
+12V DC REG.
+5V DC
-12V DC
U3
R6502 Ø1
CPU
ADDRESS BUS
DATA BUS
U15-36
U1-11, J1-11, E5
U12-13
U12-1
U4
74LS138
DEVICE
SELECT
J1-13
J1-14
J1-15
U10-12
U10-3
U1-13
U10
74LS02
U12
7407
RP2
SPARES
U5
2716
PROM
U6
2716
PROM
U11
74LS75
LATCH
U18
74LS75
LATCH
U9
74LS75
LATCH
U19
1408
DIGITA
TO
ANALO
CONVERT
J1
18 PIN
DIP SOCKET
FOR
EXPANSION
FROM JCT.
RP2-3 & SB1-8
FROM JCT.
RP2-4 & SB1-2
U13
74LS05
LEVEL
SHIFT
FROM
U25E-10
FROM
U3-3
U10B
74LS02
U25
404

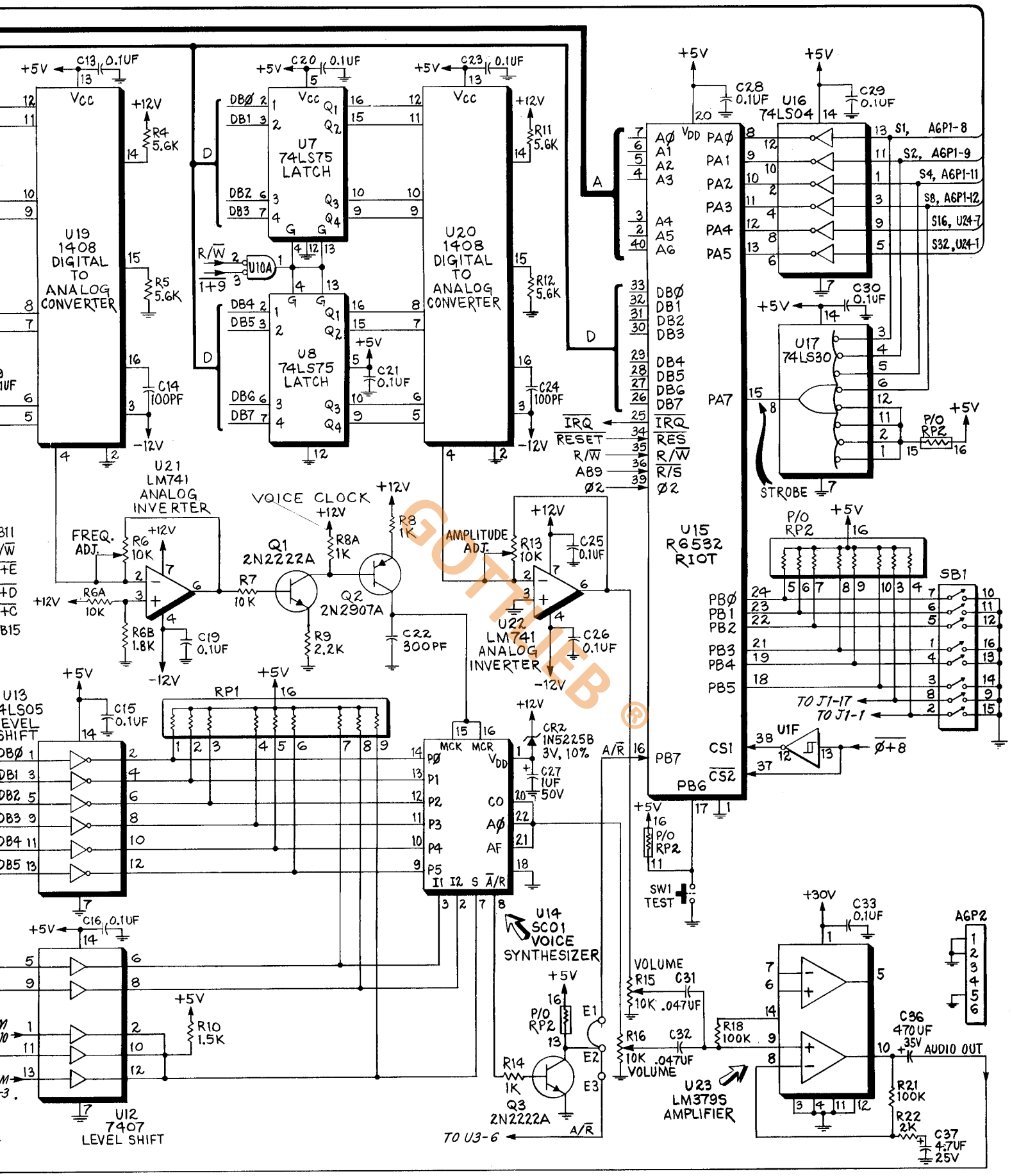

D. GOTTLIEB & CO.			
TITLE	SOUND/SPEECH BOARD A6		
USED ON	SYSTEM 80		
DRAWN	APPROVED	DATE 4-23-81	E-21337

X. WIRING AND SCHEMATIC DIAGRAMS, PARTS LISTS

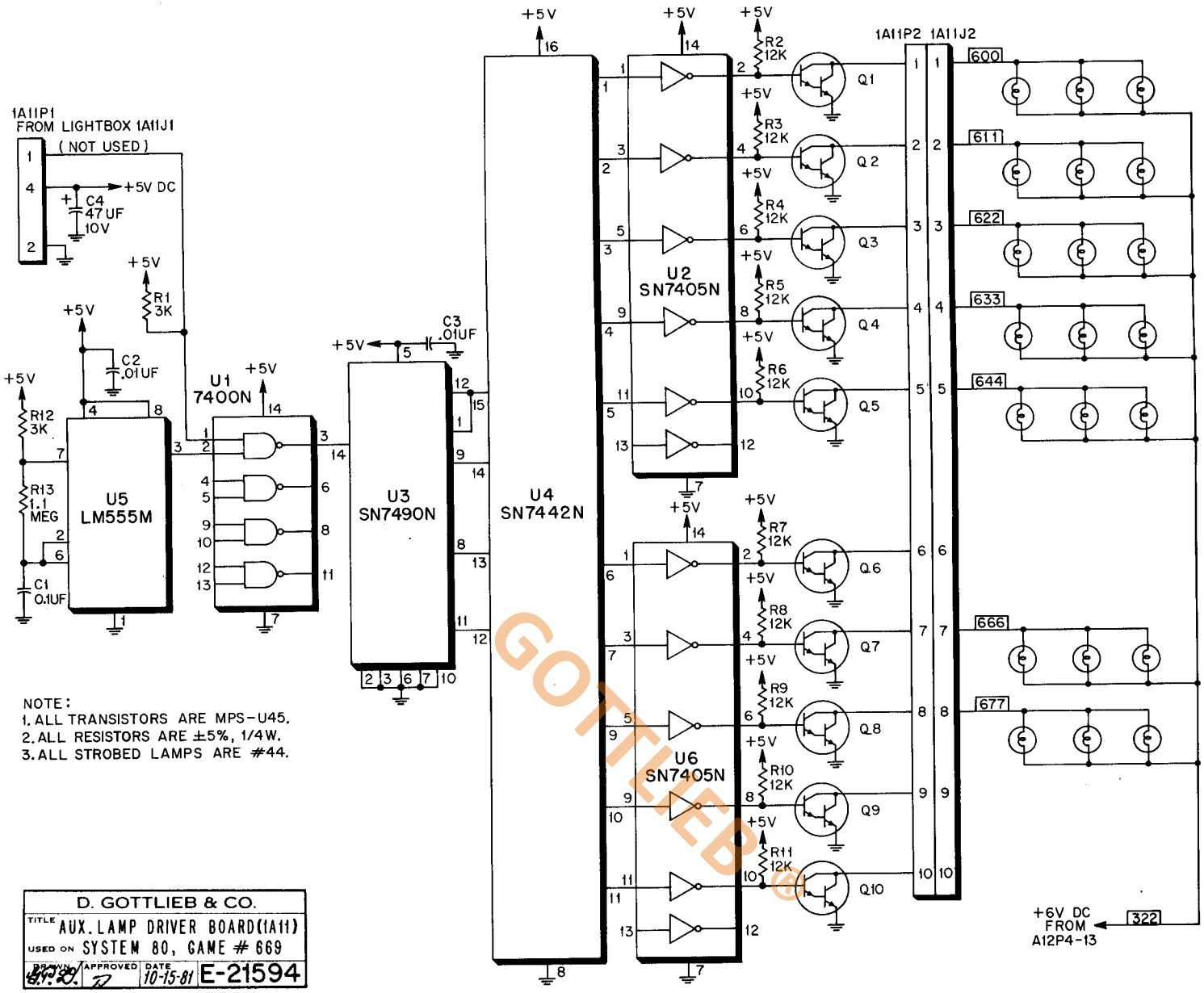

GOTTLIEB®

AUXILIARY LAMP DRIVER BOARD (A11) COMPONENT LOCATION

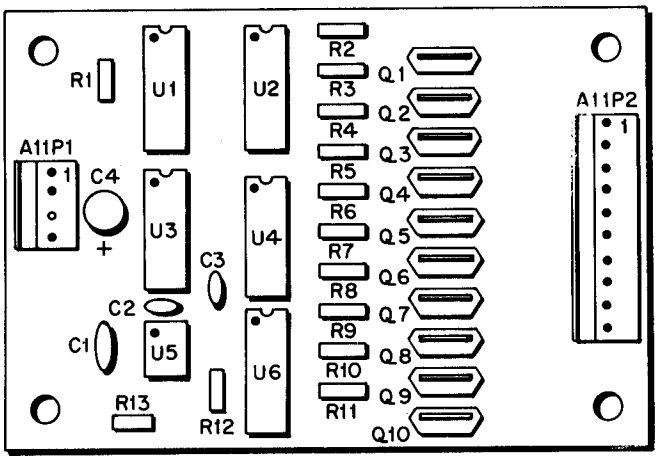

AUXILIARY LAMP DRIVER BOARD (A11) PARTS LIST

REFERENCE	DESCRIPTION	PART NUMBER
C1	CAPACITOR, .1 MFD, 100V CERAMIC RADIAL LEAD	
C2-C3	CAPACITOR, .01 MFD, 100V RADIAL LEAD	
C4	CAPACITOR, 47 MFD, 10V ELECTROLYTIC RADIAL LEAD	
Q1-Q10	TRANSISTOR, NPN DARLINGTON	MPS-U45
R1, R12	RESISTOR, 3K OHM, 5%, 1/4 W	
R2-R11	RESISTOR, 12K OHM, 5%, 1/4 W	
R13	RESISTOR, 270K OHM, 5%, 1/4 W	
U1	I.C. 2-INPUT NAND	SN7400N
U2, U6	I.C. INVERTER	SN7405N
U3	I.C. DECADE COUNTER	SN7490N
U4	I.C. DECODER	SN7442N
U5	I.C. TIMER	LM555N
P2	10 POS. SQUARE WIRE FRICTION LOCK CONNECTOR	
P1	4 POS. SQUARE WIRE FRICTION LOCK CONNECTOR	

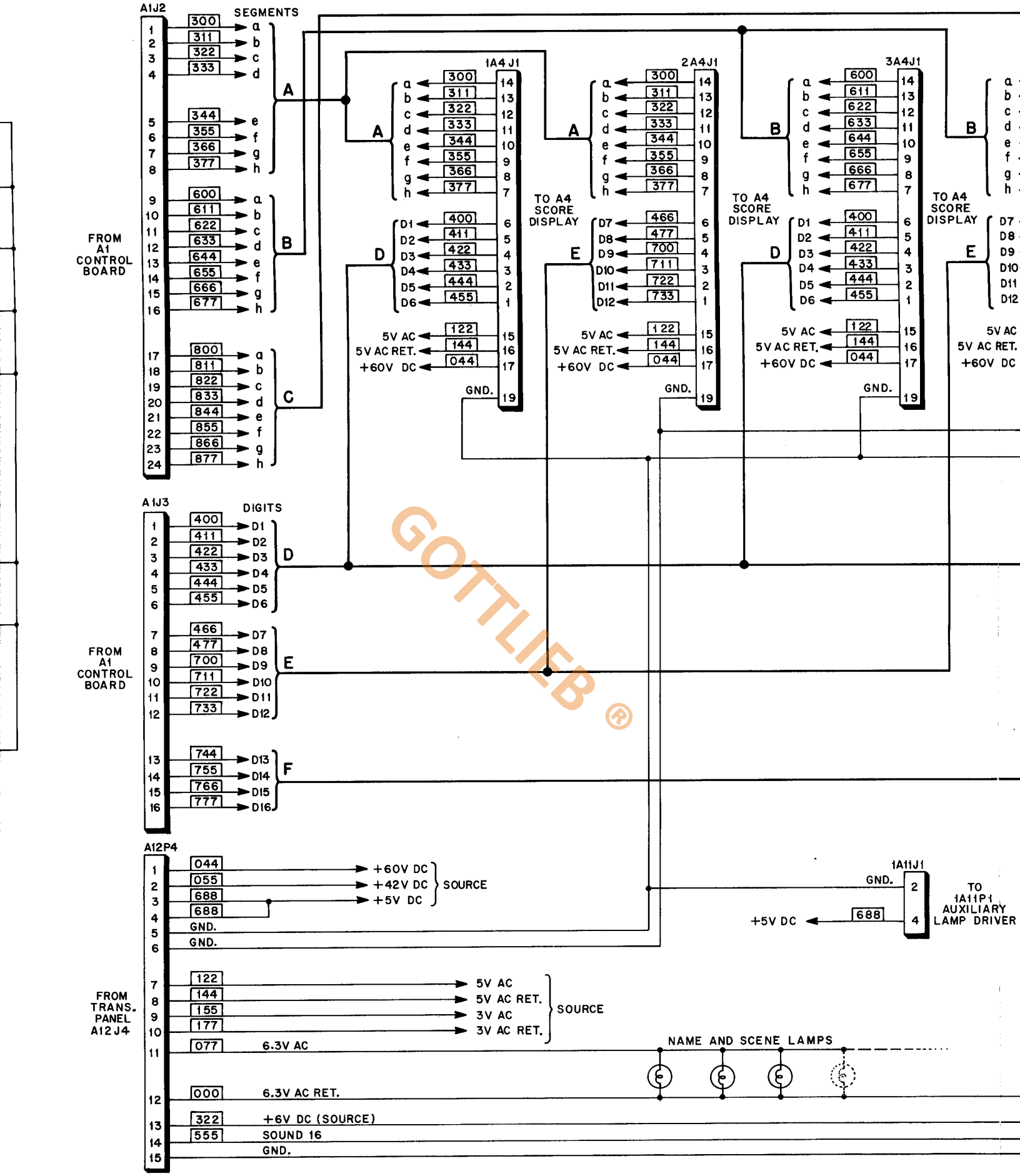
A1J2
SEGMENTS
FROM A1 CONTROL BOARD
1A4J1
2A4J1
3A4J1
TO A4 SCORE DISPLAY
5V AC
5V AC RET.
+60V DC
GND.
A1J3
DIGITS
A12P4
+60V DC
+42V DC
+5V DC
SOURCE
GND.
FROM TRANS. PANEL A12J4
5V AC
5V AC RET.
3V AC
3V AC RET.
6.3V AC
6.3V AC RET.
+6V DC (SOURCE)
SOUND 16
1A11J1
TO 1A11P1 AUXILIARY LAMP DRIVER
NAME AND SCENE LAMPS

GOTTLIEB ®

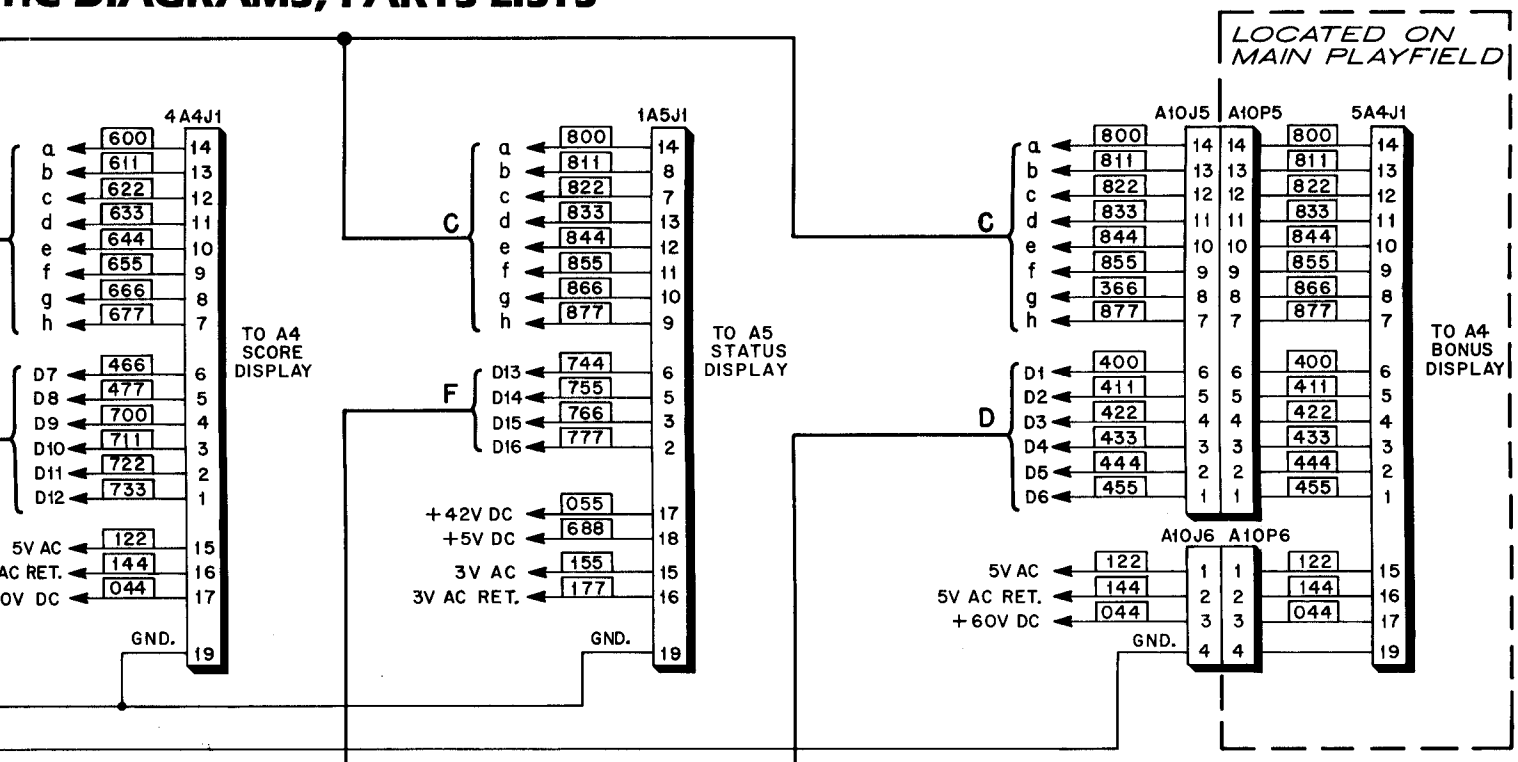

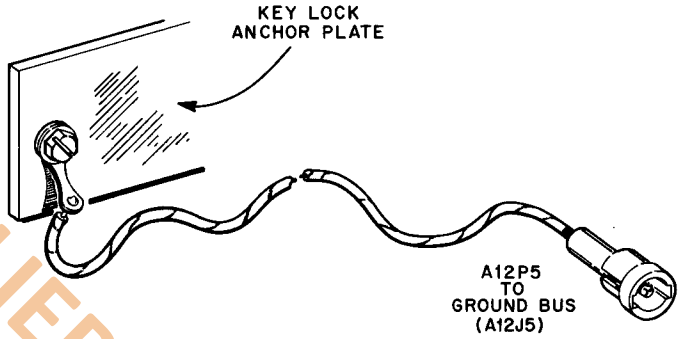

GOTTLIEB ®

COLOR CODE			
0	BLACK	5	GREEN
1	BROWN	6	BLUE
2	RED	7	PURPLE
3	ORANGE	8	SLATE
4	YELLOW	9	WHITE

NOTE:
1. NAME AND SCENE LAMPS ARE #44 OR #455 FLASHING.
2. XXX INDICATES WIRE COLOR.
3. GROUND WIRE IS 54, 18 GA.

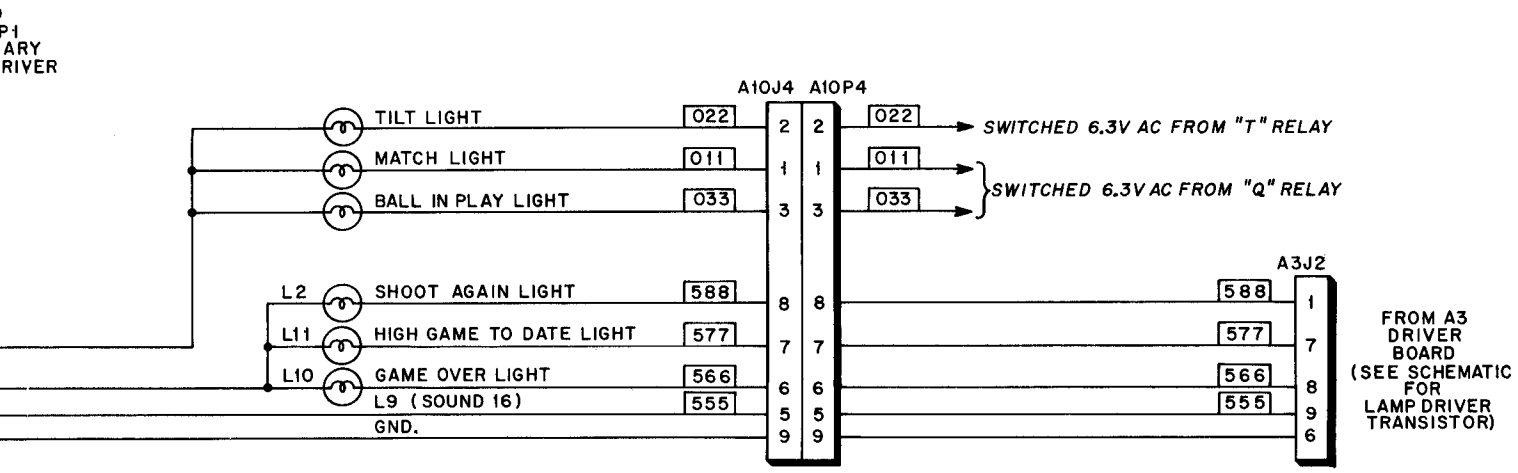

D. GOTTLIEB & CO.			
TITLE LIGHTBOX SCHEMATIC DIAGRAM			
USED ON SYSTEM 80, GAME # 669			
DRAWN	APPROVED	DATE 10-21-81	E-21595

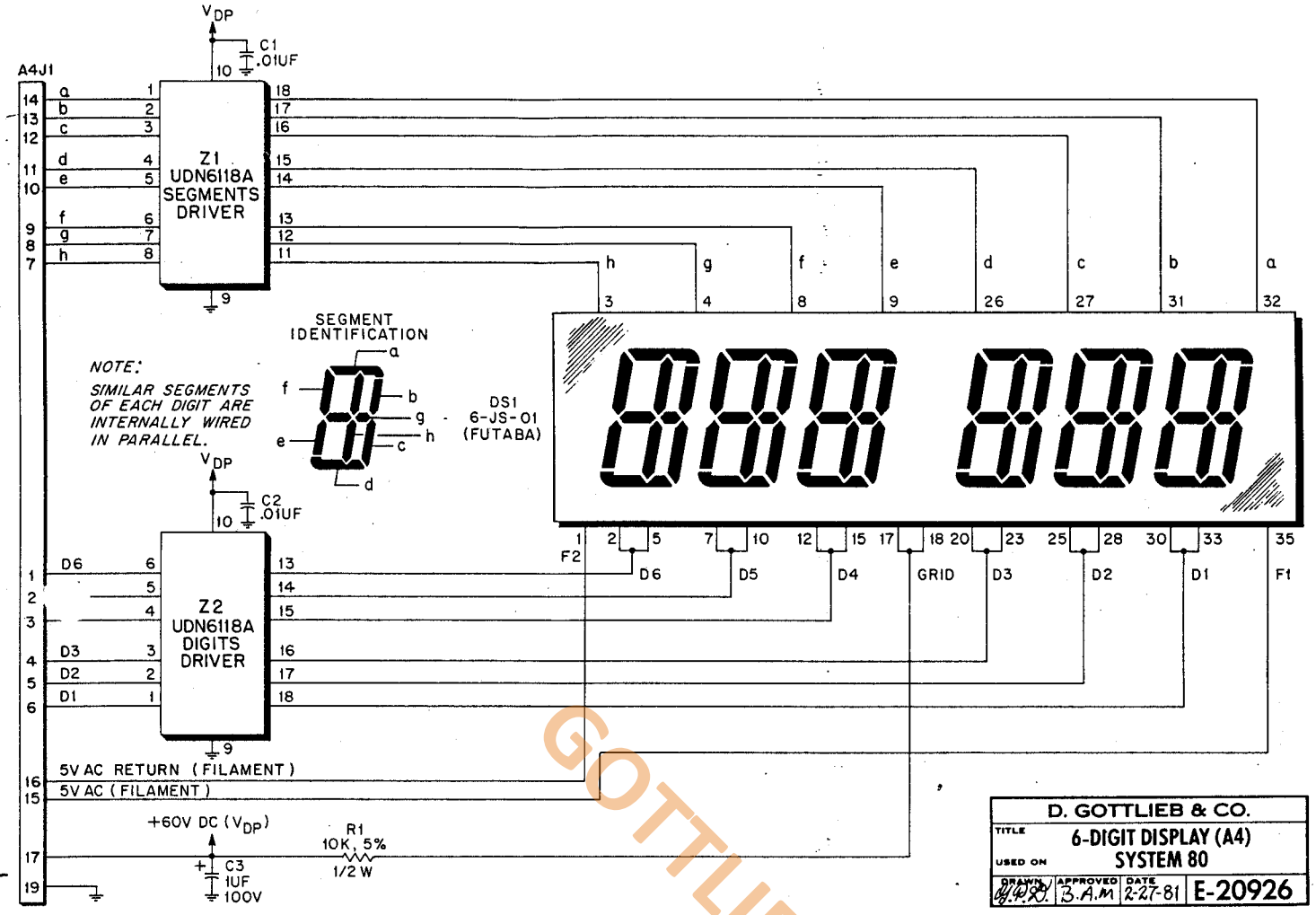

6-DIGIT DISPLAY (A4) COMPONENT LOCATION

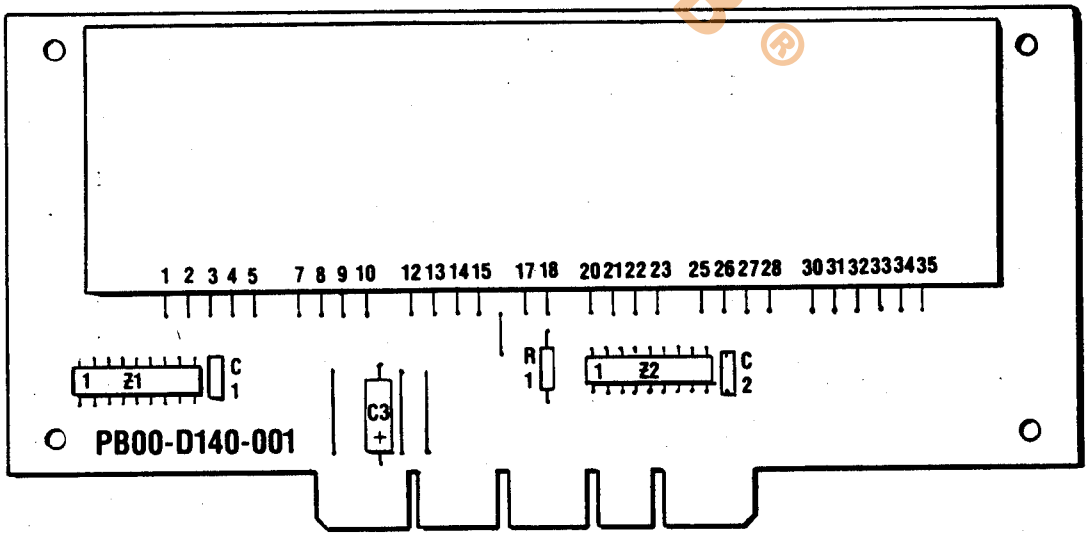

6-DIGIT DISPLAY (A4) PARTS LIST

REFERENCE	DESCRIPTION	PART NUMBER
C1, C2	Capacitor, .01 mfd., 100V Kemet	C320C103MIR5CA
C3	Capacitor, 1 mfd., 100V Sprague	TE1400
DS1	6-Digit Display Tube—FUTABA	6-JS-01
R1	Resistor, 10K ohm, 5%, 1/2W	RC20GF103
Z1, Z2	IC—Fluorescent Display Driver—Sprague	UDN6118A

GOTTLIEB ®

MATIC DIAGRAMS, PARTS LIST

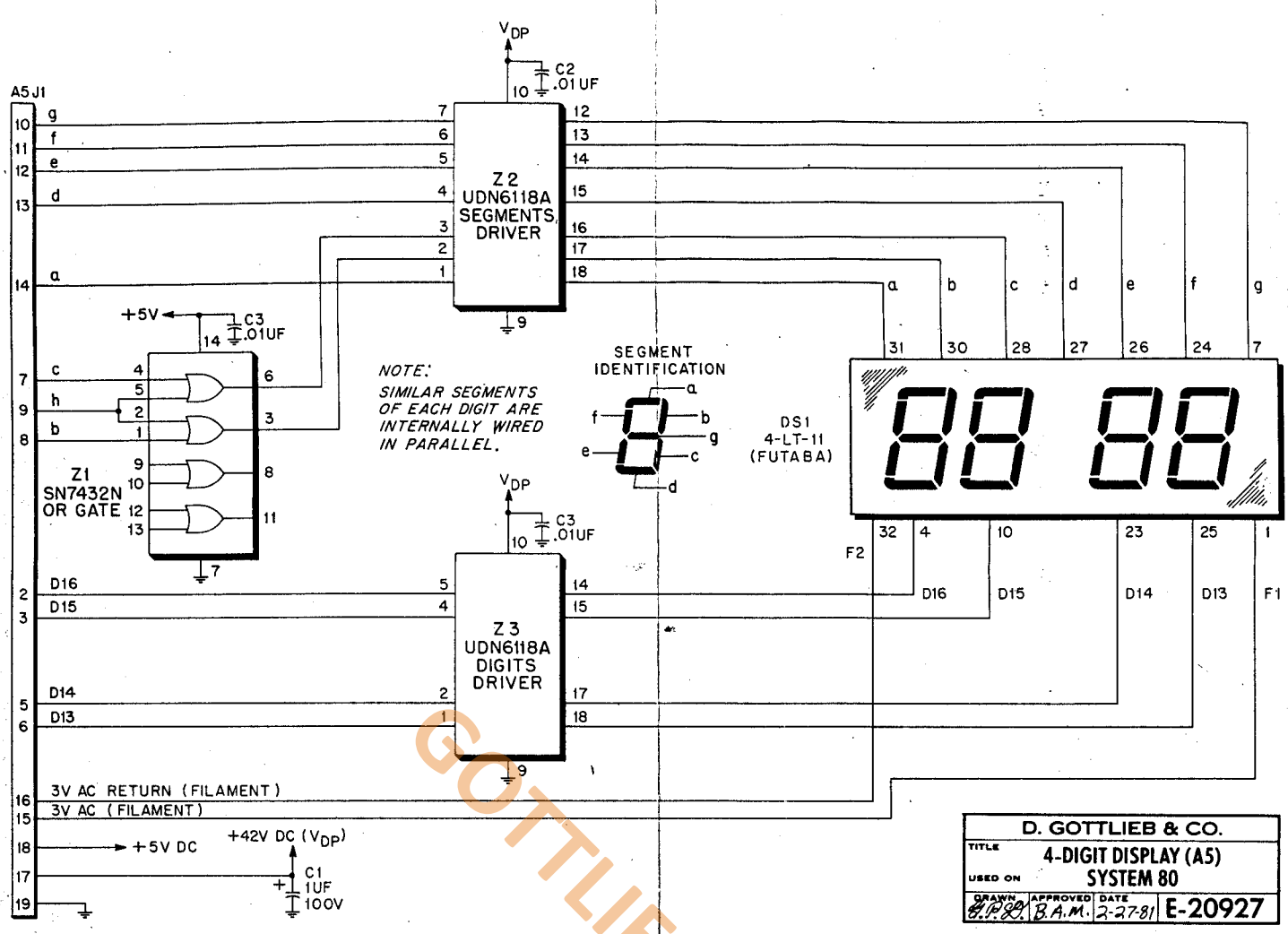

4-DIGIT DISPLAY (A5) COMPONENT LOCATION

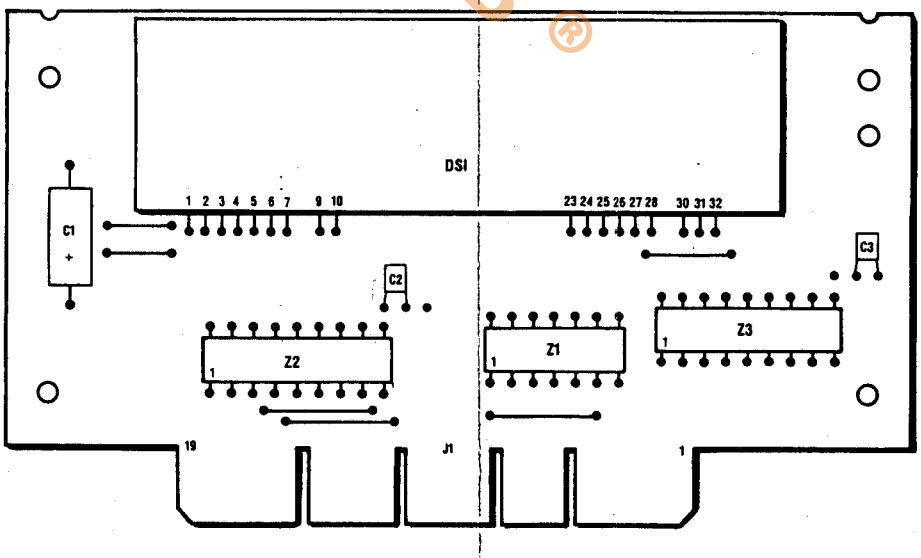

4-DIGIT DISPLAY (A5) PARTS LIST

REFERENCE	DESCRIPTION	PART NUMBER
C1	Capacitor, 1 mfd., 100V Sprague	TE1400
C2, C3	Capacitor, .01 mfd., 100V Kemet	C320C103MIR5CA
DS1	4-Digit Display Tube—FUTABA	4-LT-11
Z1	IC—Quad or Gate—T.I.	SN7432N
Z2, Z3	IC—Fluorescent Display Driver—Sprague	UDN6118A

GOTTLIEB ®

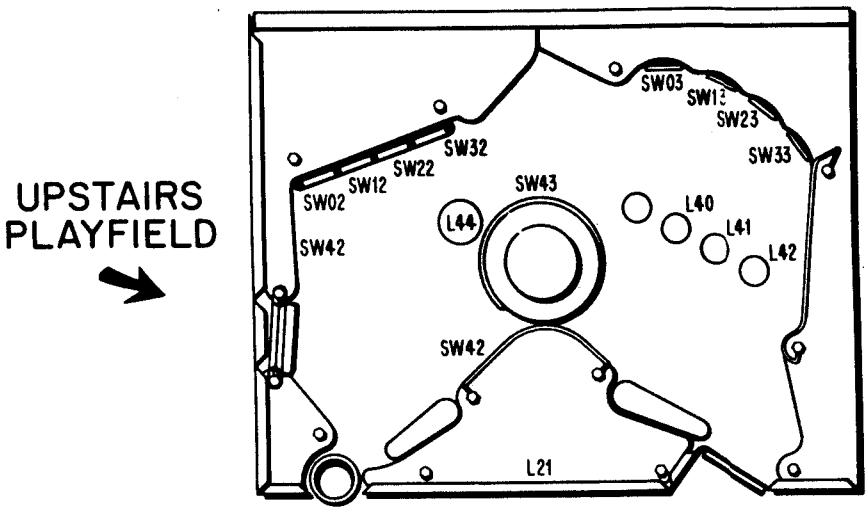

PLAYBOARD SWITCH AND LAMP ASSIGNMENTS

UPPER PLAYBOARD

SWITCH MATRIX NO.	SWITCH ASSIGNMENT
02	#1 Drop Target
03	#1 Target
12	#2 Drop Target
13	#2 Target
22	#3 Drop Target
23	#3 Target
32	#4 Drop Target
33	#4 Target
42	10 Point
43	Pop Bumpers

LAMP NO.	LAMP ASSIGNMENT
L21	Double Scoring
L40	#2 Target
L41	#3 Target
L42	#4 Target
L44	Special

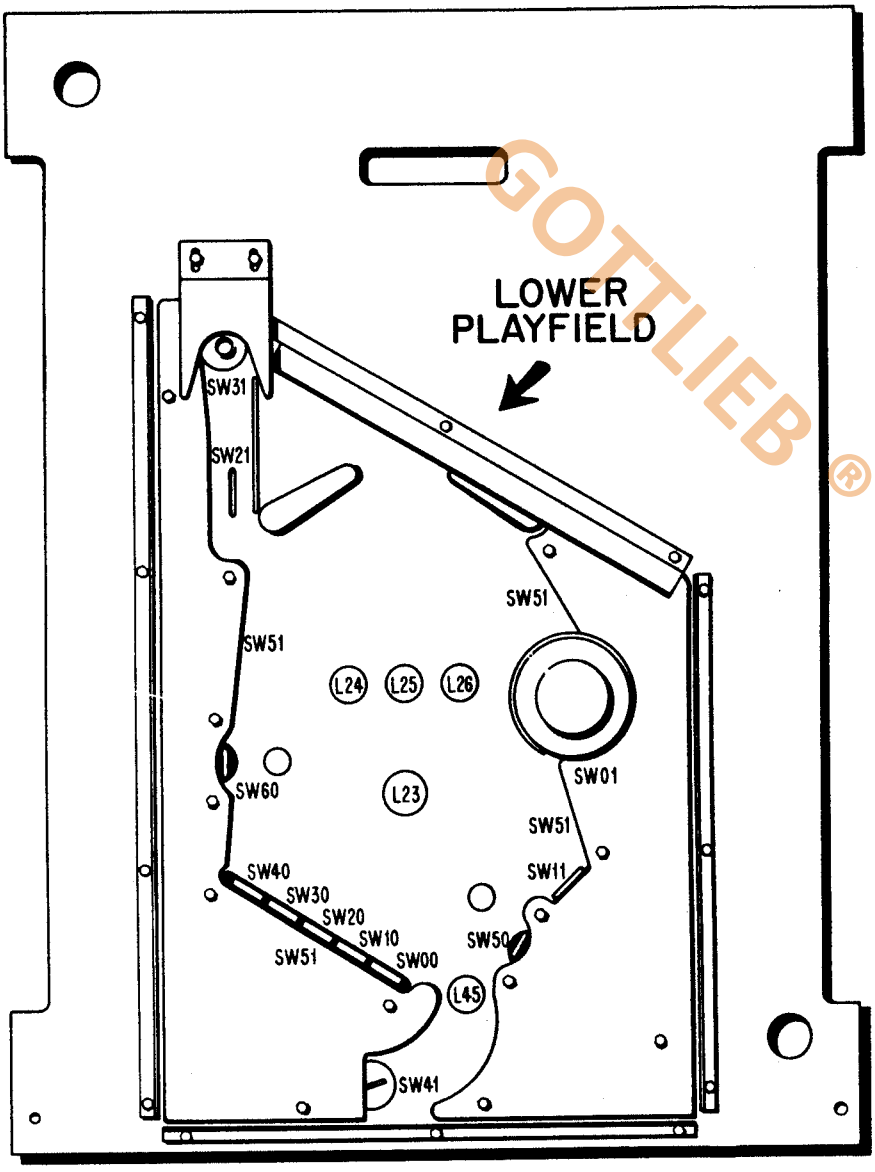

GOTTLIEB®

LOWER PLAYBOARD

SWITCH MATRIX NO.	SWITCH ASSIGNMENT
00	#1 Drop Target
01	Pop Bumper
10	#2 Drop Target
11	Kicking Target
20	#3 Drop Target
21	Outside Rollover
30	#4 Drop Target
31	Up Kicker
40	#5 Drop Target
41	Hole
50	Right Target
51	10 Point and Kicking Rubbers
60	Left Target

LAMP NO.	LAMP ASSIGNMENT
L23	Double Scoring
L24	#1 Sequence
L25	#2 Sequence and Left Target
L26	#3 Sequence and Right Target
L45	Special

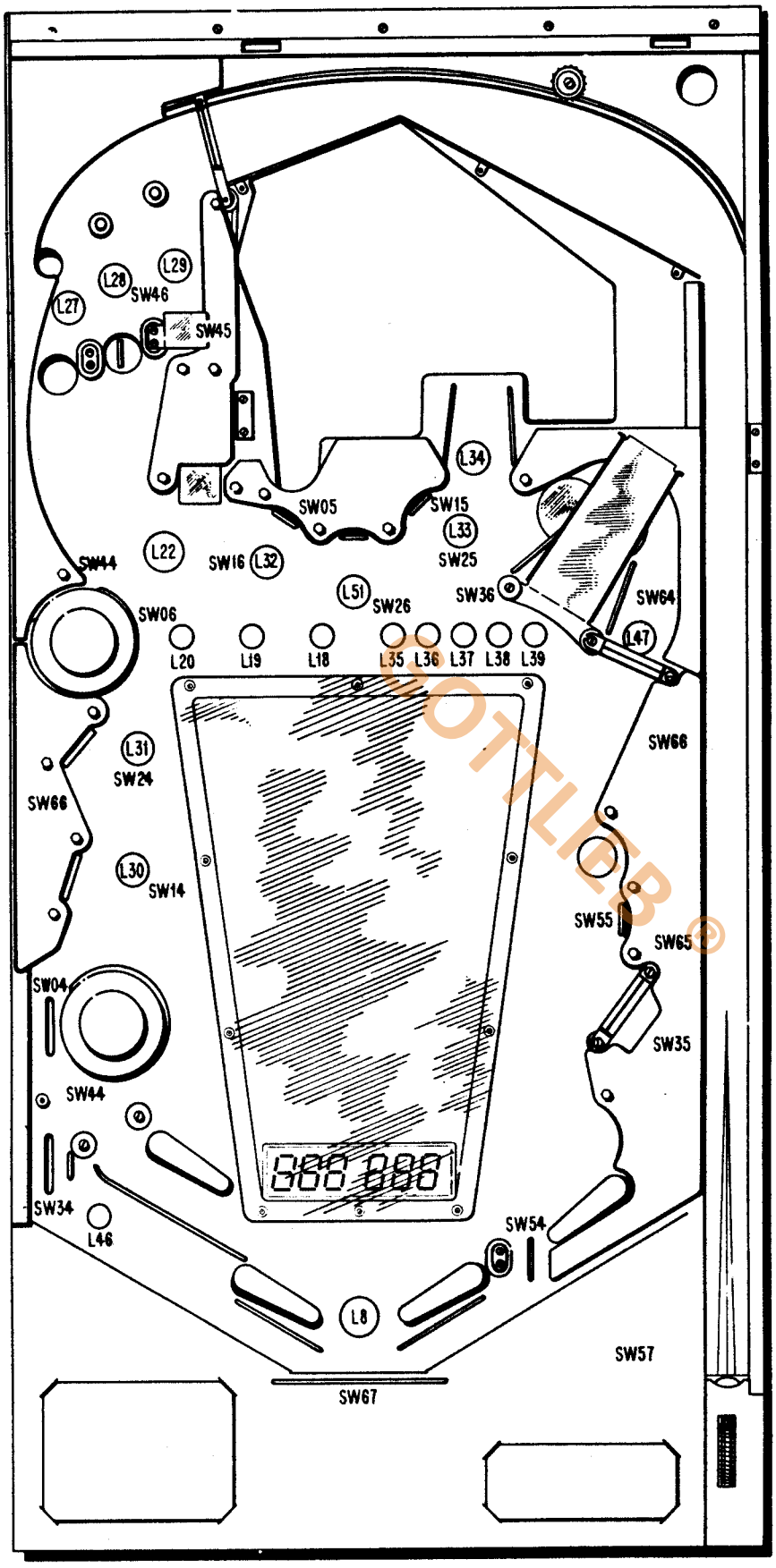

GOTTLIEB®

PLAYBOARD SWITCH AND LAMP ASSIGNMENTS

MAIN PLAYBOARD

SWITCH MATRIX

NO.	
04	Left Return Rollover
05	#3 Target
06	#1 Trough
14	#1 Kicking Target
15	#4 Target
16	#2 Trough
24	#2 Kicking Target
25	#5 Top Kicking Target
26	Roll Down Target Trough
34	Left Outside Rollover
35	Rollunder
36	Trap Door Trough
44	Pop Bumpers (2)
45	Up Kicker
46	Top Center Hole
54	Right Outside Rollover
55	Right Bottom Target
57	Tilt
64	Roundabout
65	Right Side Kicker
66	10 Point and Kicking Rubber
67	Outhole

LAMP

NO.	LAMP ASSIGNMENT
L18	Double Bonus Upstairs Playfield
L19	Double Bonus Main Playfield
L20	Double Bonus Cellar
L27	Top Left Hole
L28	Top Center Hole
L29	Top Right Hole
L30	#1 Kicking Target
L31	#2 Kicking Target
L32	#3 Target
L33	#4 Target
L34	#5 Kicking Target
L35	1X
L36	2X
L37	3X
L38	4X
L39	5X
L46	Left Outside Rollover
L47	Roundabout
L51	Roll Down Target

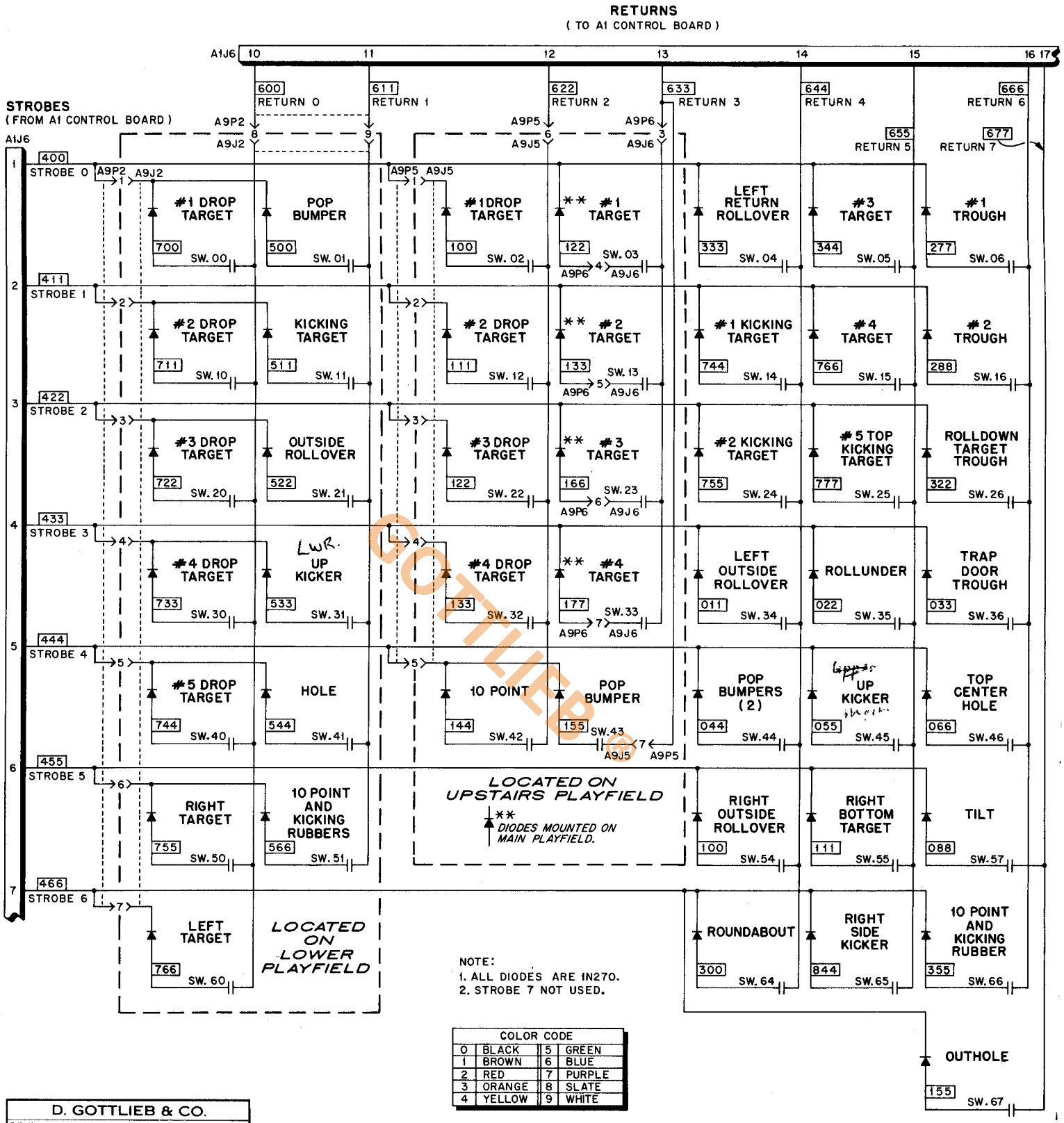
RETURNS
(TO A1 CONTROL BOARD)
A1J6
10
11
12
13
14
15
16 17
STROBES
(FROM A1 CONTROL BOARD)
600 RETURN 0
611 RETURN 1
622 RETURN 2
633 RETURN 3
644 RETURN 4
655 RETURN 5
666 RETURN 6
677 RETURN 7
A9P2
A9J2
A9P5
A9J5
A9P6
A9J6
400 STROBE 0
411 STROBE 1
422 STROBE 2
433 STROBE 3
444 STROBE 4
455 STROBE 5
466 STROBE 6
#1 DROP TARGET 700 SW. 00
POP BUMPER 500 SW. 01
#1 DROP TARGET 100 SW. 02
** #1 TARGET 122 SW. 03
LEFT RETURN ROLLOVER 333 SW. 04
#3 TARGET 344 SW. 05
#1 TROUGH 277 SW. 06
#2 DROP TARGET 711 SW. 10
KICKING TARGET 511 SW. 11
#2 DROP TARGET 111 SW. 12
** #2 TARGET 133 SW. 13
#1 KICKING TARGET 744 SW. 14
#4 TARGET 766 SW. 15
#2 TROUGH 288 SW. 16
#3 DROP TARGET 722 SW. 20
OUTSIDE ROLLOVER 522 SW. 21
#3 DROP TARGET 122 SW. 22
** #3 TARGET 166 SW. 23
#2 KICKING TARGET 755 SW. 24
#5 TOP KICKING TARGET 777 SW. 25
ROLLDOWN TARGET TROUGH 322 SW. 26
#4 DROP TARGET 733 SW. 30
LWR. UP KICKER 533 SW. 31
#4 DROP TARGET 133 SW. 32
** #4 TARGET 177 SW. 33
LEFT OUTSIDE ROLLOVER 011 SW. 34
ROLLUNDER 022 SW. 35
TRAP DOOR TROUGH 033 SW. 36
#5 DROP TARGET 744 SW. 40
HOLE 544 SW. 41
10 POINT 144 SW. 42
POP BUMPER 155 SW. 43
POP BUMPERS (2) 044 SW. 44
UP KICKER 055 SW. 45
TOP CENTER HOLE 066 SW. 46
RIGHT TARGET 755 SW. 50
10 POINT AND KICKING RUBBERS 566 SW. 51
LOCATED ON UPSTAIRS PLAYFIELD
** DIODES MOUNTED ON MAIN PLAYFIELD.
RIGHT OUTSIDE ROLLOVER 100 SW. 54
RIGHT BOTTOM TARGET 111 SW. 55
TILT 088 SW. 57
LEFT TARGET 766 SW. 60
LOCATED ON LOWER PLAYFIELD
ROUNDABOUT 300 SW. 64
RIGHT SIDE KICKER 844 SW. 65
10 POINT AND KICKING RUBBER 355 SW. 66
OUTHOLE 155 SW. 67
NOTE:
1. ALL DIODES ARE 1N270.
2. STROBE 7 NOT USED.
COLOR CODE
0 BLACK
1 BROWN
2 RED
3 ORANGE
4 YELLOW
5 GREEN
6 BLUE
7 PURPLE
8 SLATE
9 WHITE
D. GOTTLIEB & CO.
TITLE PLAYFIELDS SWITCH MATRIX
USED ON SYSTEM 80, GAME #669
DRAWN APPROVED DATE 3 NOV.1981
E-21596

GOTTLIEB®

PLAYFIELDS "CONTROLLED" SOLENOIDS AND ILLUMINATION

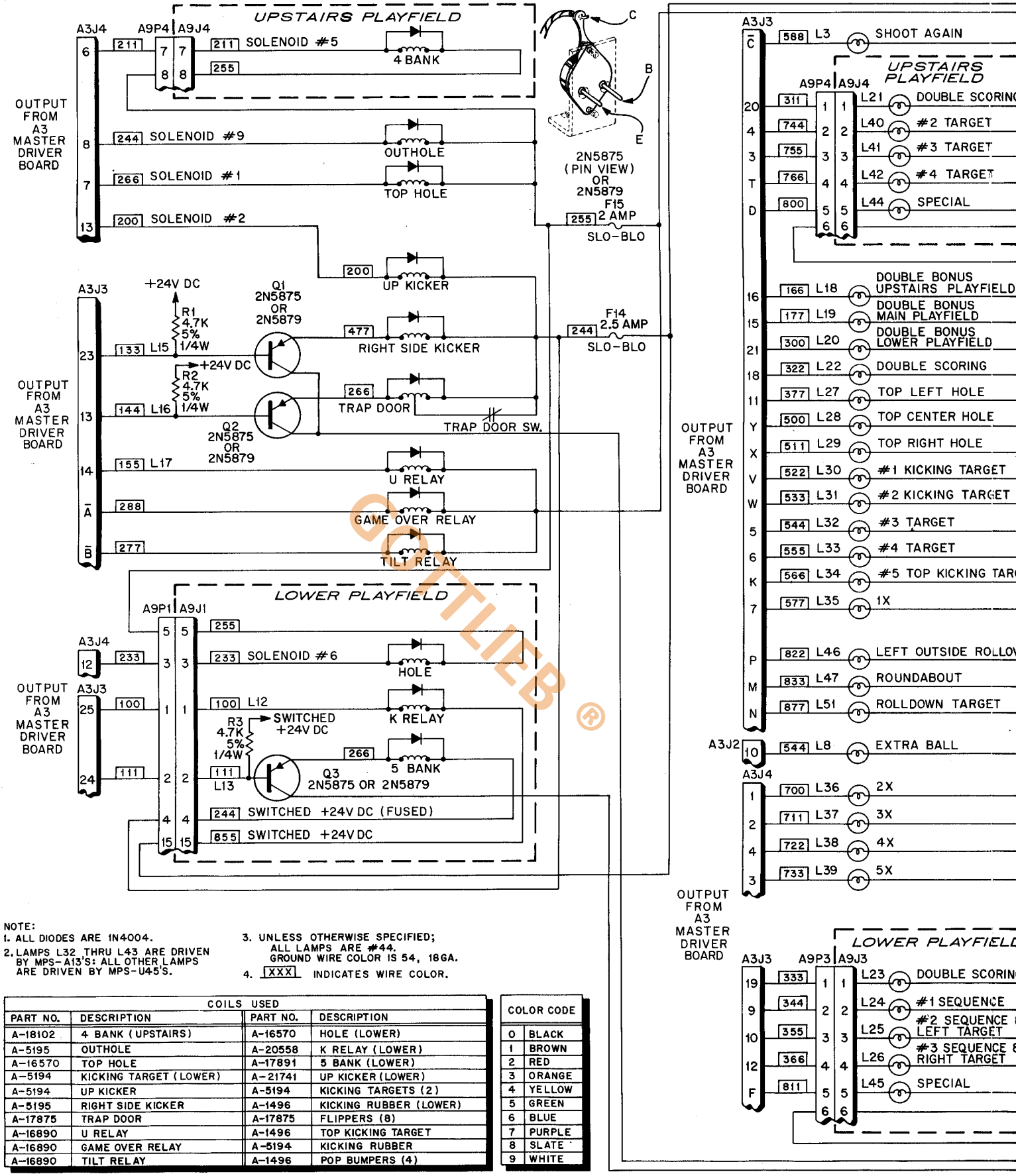

NOTE:
1. ALL DIODES ARE 1N4004.
2. LAMPS L32 THRU L43 ARE DRIVEN BY MPS-A13'S: ALL OTHER LAMPS ARE DRIVEN BY MPS-U45'S.
3. UNLESS OTHERWISE SPECIFIED; ALL LAMPS ARE #44. GROUND WIRE COLOR IS 54, 18GA.
4. [XXX] INDICATES WIRE COLOR.

COILS USED

PART NO.	DESCRIPTION	PART NO.	DESCRIPTION
A-18102	4 BANK (UPSTAIRS)	A-16570	HOLE (LOWER)
A-5195	OUTHOLE	A-20558	K RELAY (LOWER)
A-16570	TOP HOLE	A-17891	5 BANK (LOWER)
A-5194	KICKING TARGET (LOWER)	A-21741	UP KICKER (LOWER)
A-5194	UP KICKER	A-5194	KICKING TARGETS (2)
A-5195	RIGHT SIDE KICKER	A-1496	KICKING RUBBER (LOWER)
A-17875	TRAP DOOR	A-17875	FLIPPERS (8)
A-16890	U RELAY	A-1496	TOP KICKING TARGET
A-16890	GAME OVER RELAY	A-5194	KICKING RUBBER
A-16890	TILT RELAY	A-1496	POP BUMPERS (4)

COLOR CODE	
0	BLACK
1	BROWN
2	RED
3	ORANGE
4	YELLOW
5	GREEN
6	BLUE
7	PURPLE
8	SLATE
9	WHITE

GOTTLIEB ®

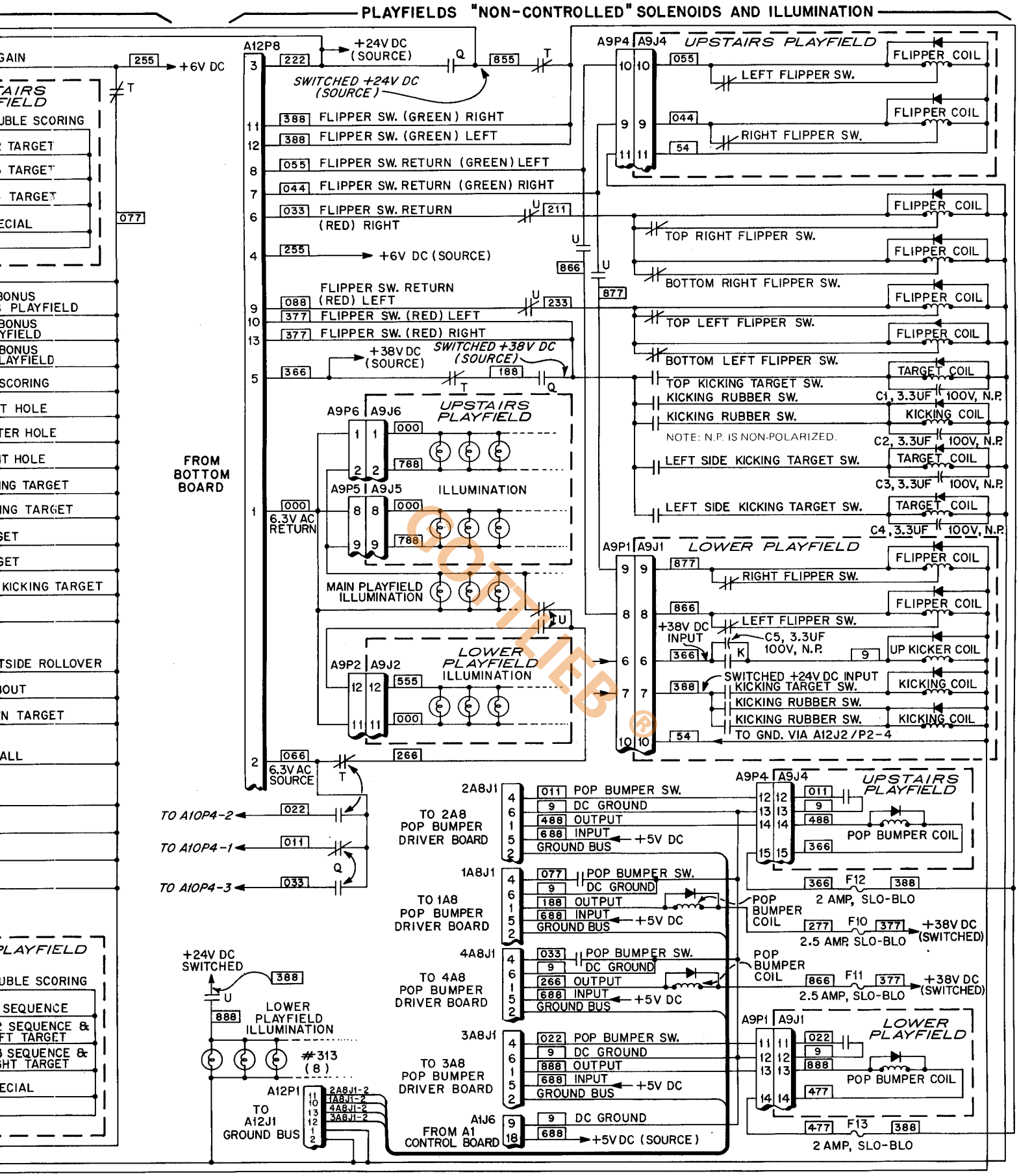

GOTTLIEB ®

D. GOTTLIEB & CO.			
TITLE	PLAYFIELDS SOLENOIDS AND ILLUMINATION		
USED ON	SYSTEM 80, GAME #669		
DRAWN	APPROVED	DATE 10-15-81	E-21597

X. WIRING AND SCHEMATIC DIAGRAMS, PARTS LISTS

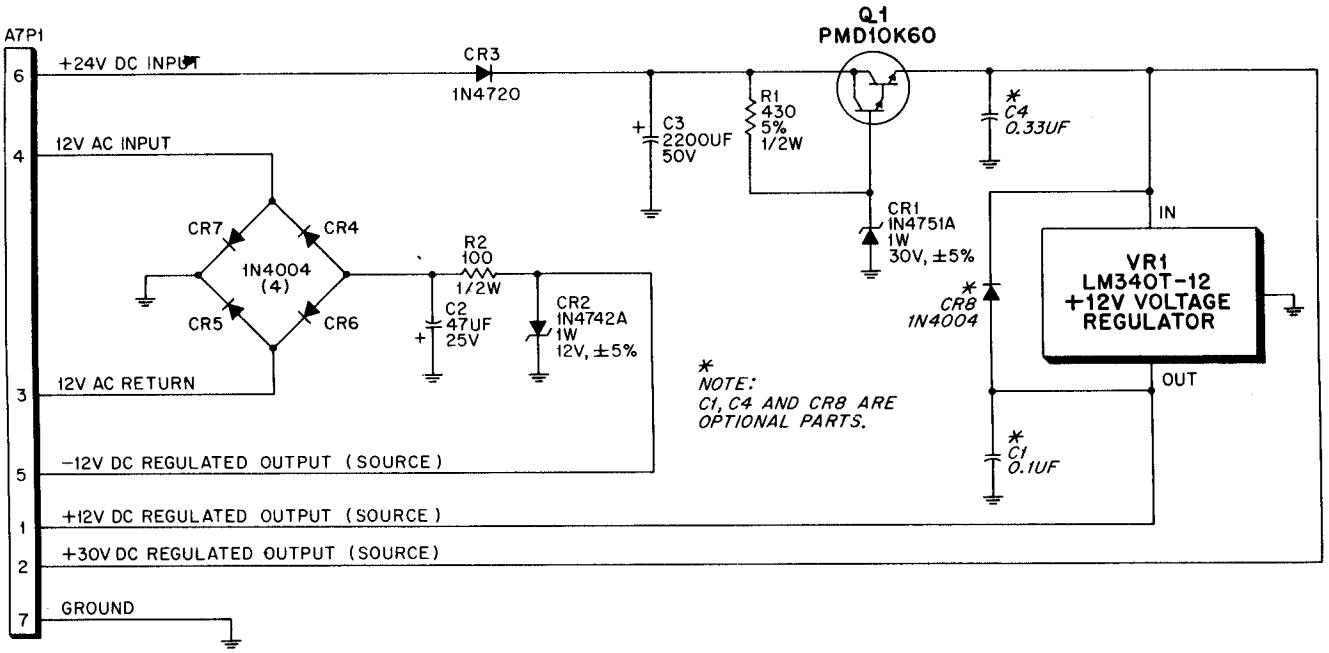

D. GOTTLIEB & CO.			
TITLE	SOUND/SPEECH BOARD POWER SUPPLY A7		
USED ON	SYSTEM 80, GAME # 668		
DRAWN	APPROVED	DATE 8-5-81	D-21343

GOTTLIEB®

SOUND/SPEECH POWER SUPPLY (A7) COMPONENT LOCATION

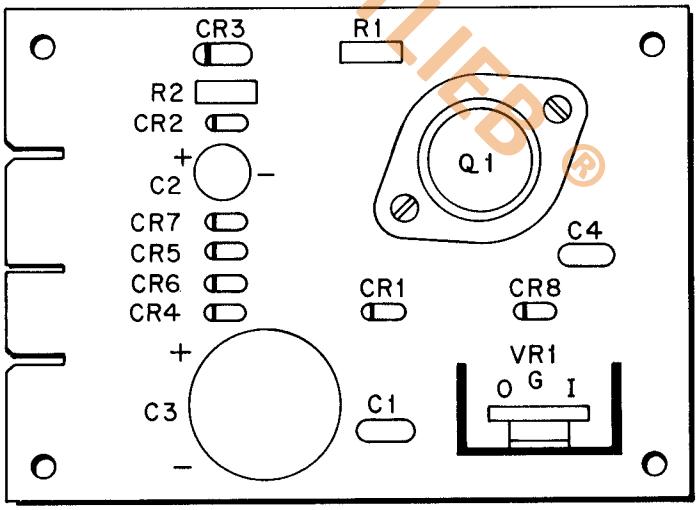

SOUND/SPEECH POWER SUPPLY (A7) PARTS LIST

REFERENCE	DESCRIPTION	PART NO.
C1	Capacitor 0.1 UF	
C2	Capacitor 47 UF, 25 Volt	
C3	Capacitor 2200 UF, 50 Volt	
C4	Capacitor 0.33 UF	
CR1	Diode, Zener 30 V, ± 5%, 1W	1N4751A
CR2	Diode, Zener 12V, ± 5%, 1W	1N4742A
CR3	Diode	1N4720
CR4, CR5, CR6 CR7, CR8	Diode	1N4004
R1	Resistor 430 OHM, 5%, 1/2 Watt	
R2	Resistor 100 OHM, 1/2 Watt	
Q1	Transistor, Darlington Pair	PMD10K60
VR1	+ 12 Volt Voltage Regulator	LM 340T-12

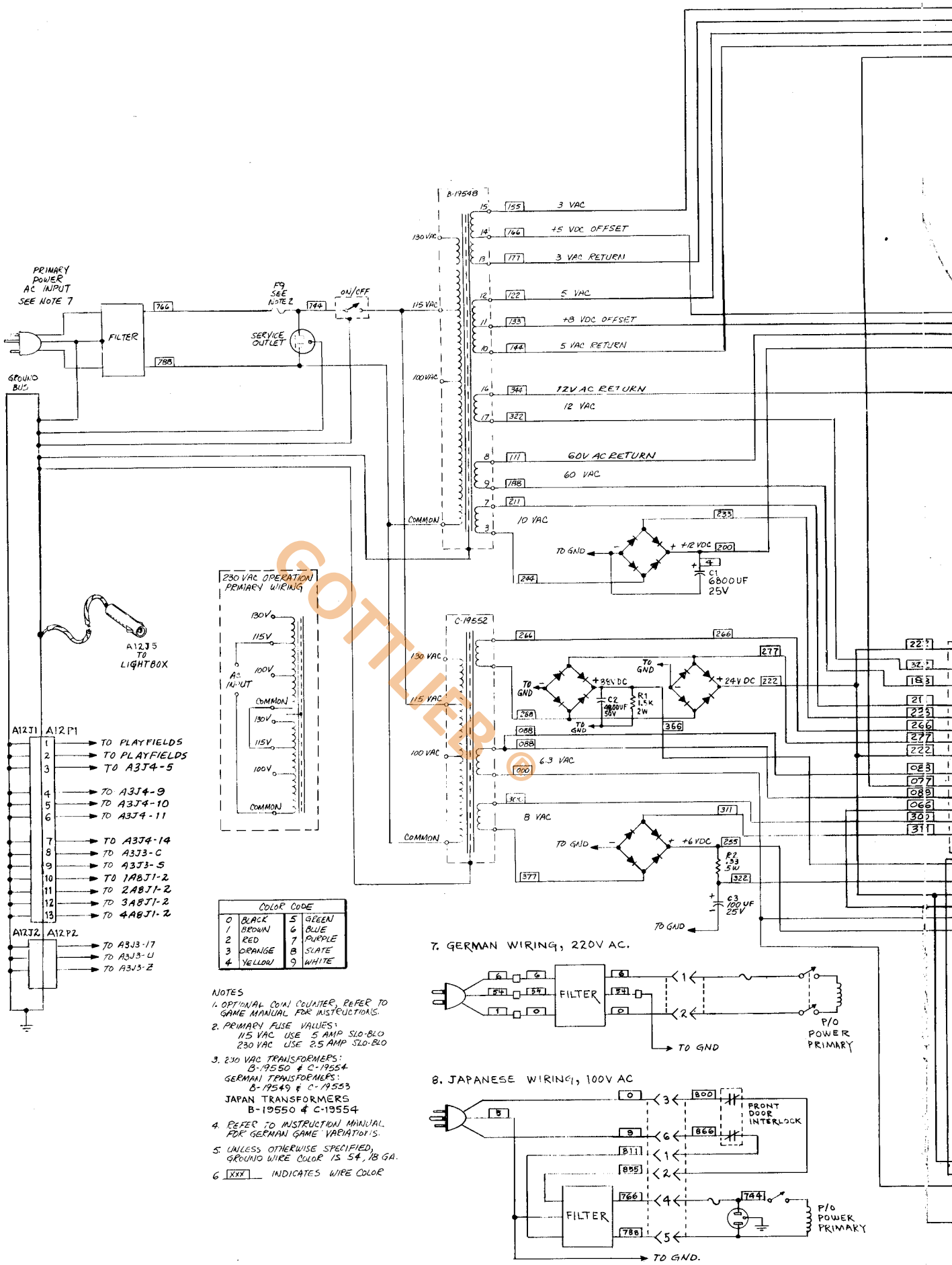

NOTES

1. OPTIONAL COIN COUNTER, REFER TO GAME MANUAL FOR INSTRUCTIONS.
2. PRIMARY FUSE VALUES:
   115 VAC USE 5 AMP SLO-BLO
   230 VAC USE 2.5 AMP SLO-BLO
3. 230 VAC TRANSFORMERS:
   B-19550 & C-19554
   GERMAN TRANSFORMERS:
   B-19549 & C-19553
   JAPAN TRANSFORMERS
   B-19550 & C-19554
4. REFER TO INSTRUCTION MANUAL FOR GERMAN GAME VARIATIONS.
5. UNLESS OTHERWISE SPECIFIED, GROUND WIRE COLOR IS 54, 18 GA.
6. XXX INDICATES WIRE COLOR

GOTTLIEB®

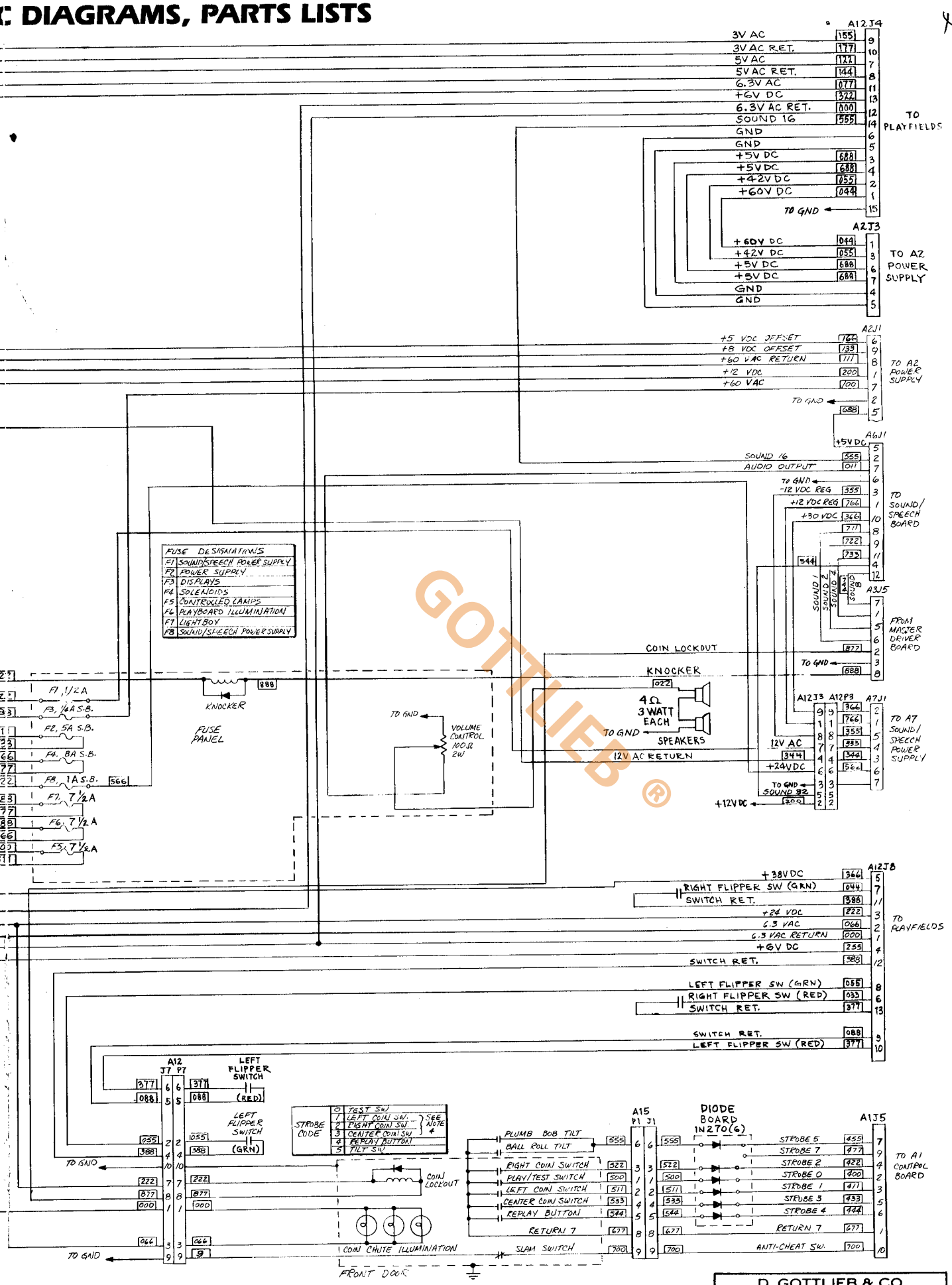

GOTTLIEB ®

D. GOTTLIEB & CO.

TITLE BOTTOM BOARD AND CABINET SYSTEM 80, GAME #669

USED ON

DRAWN	APPROVED	DATE	
R		10-23-81	E-21598

POWER SUPPLY (A2) COMPONENT LOCATION

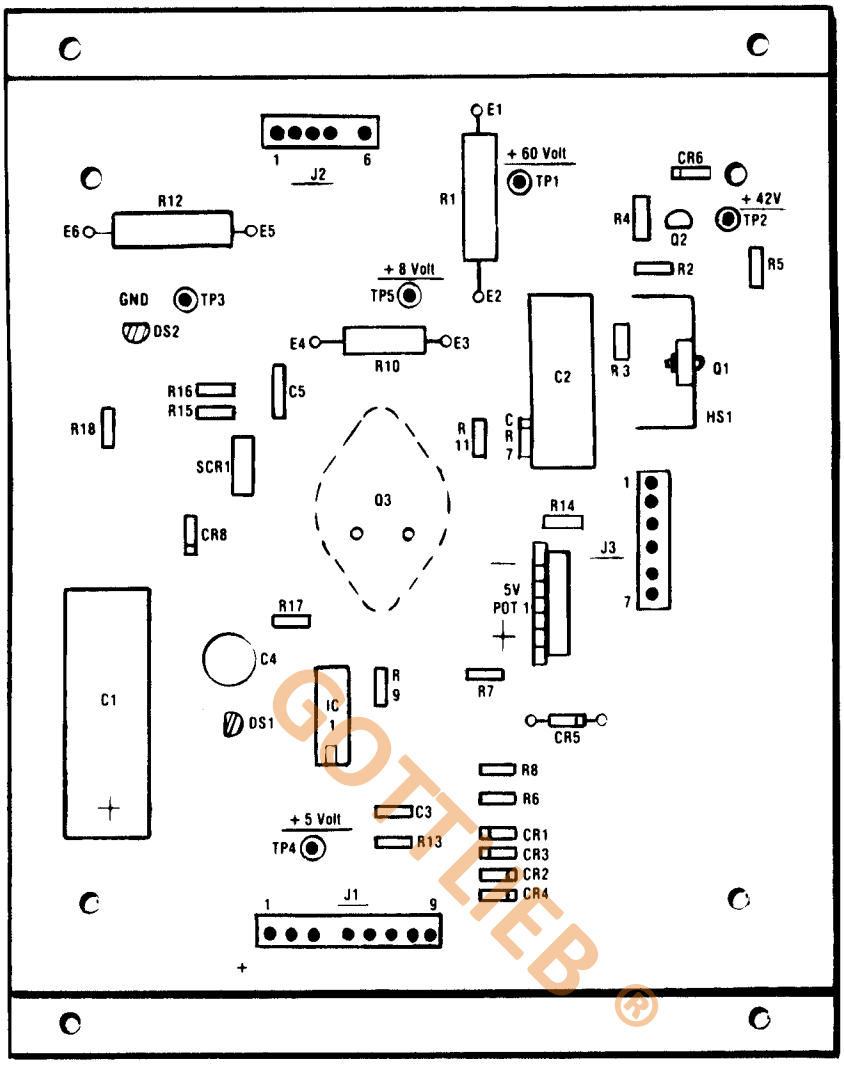

GOTTLIEB ®

POWER SUPPLY (A2) PARTS LIST

REFERENCE	DESCRIPTION	PART NUMBER
C1	Capacitor, 470 mfd., 100V	
C2	Capacitor, 47 mfd., 100V	
C3	Capacitor, 1000 Picofarad, 50V	
C4	Capacitor, 470 mfd., 10V	
C5	Capacitor, 2 mfd., +80%, −20%, 16V	
CR1-CR4	Diode	1N4004
CR5	Diode, Zener, 62V, 5%, 1W	1N4759A
CR6	Diode, Zener, 18V, 5%, 1W	1N4746A
CR7	Diode, Zener, 8.2V, 10%, 2W	1N3445
CR8	Diode, Zener, 5.6V, 5%, 1W	1N4734A
DS1, DS2	Diode, Light Emitting	CM4-22
E1-E6	Turret Terminal	
IC1	I.C.—14 Pin Dip	UA723CN
J1	Connector, 9 Pin, Molex	
J2	Connector, 6 Pin, Molex	
J3	Connector, 7 Pin, Molex	
POT1	Potentiometer, 500 ohm, CTS	115R501A
Q1	Transistor, NPN, National	SW4F013
Q2	Transistor, NPN	2N5550
Q3	Transistor, Darlington, LAMBDA	PMD10K40
R1	Resistor, 1.3K ohm, 10%, 5W	
R2, R9	Resistor, 1K ohm, 5%, 1/4W	
R3	Resistor, 12K ohm, 5%, 1/2W	

REFERENCE	DESCRIPTION	PART NUMBER
R4	Resistor, 33 ohm, 5%, 1W	
R5	Resistor, 10K ohm, 5%, 1/2W	
R6, R13	Resistor, 510 ohm, 5%, 1/4W	
R7	Resistor, 3.9K ohm, 5%, 1/4W	
R8	Resistor, 10K ohm, 5%, 1/4W	
R10	Resistor, 30 ohm, 5%, 2W	
R11	Resistor, 2.2K ohm, 5%, 1/4W	
R12	Resistor, .33 ohm, 10%, 5W (Wirewound)	
R14	Resistor, 2K ohm, 5%, 1/4W	
R15	Resistor, 100 ohm, 5%, 1/4W	
R16	Resistor, 20 ohm, 5%, 1/4W	
R17	Resistor, 620 ohm, 5%, 1/2W	
R18	Resistor, 180 ohm, 5%, 1/4W	
SCR1	Silicon Controlled Rectifier	S107Y1
TP1-TP5,	Turret Terminal	
	Eyelet	GS2-3
	Heat Sink Mounting Plate	
	Heat Sink, Thermalloy	
	Insulator	INS-3
	Insulator	DM111
	Spacer—6-32 Thread x 5/32	
	Spacer—6-32 Thread x 1/8	

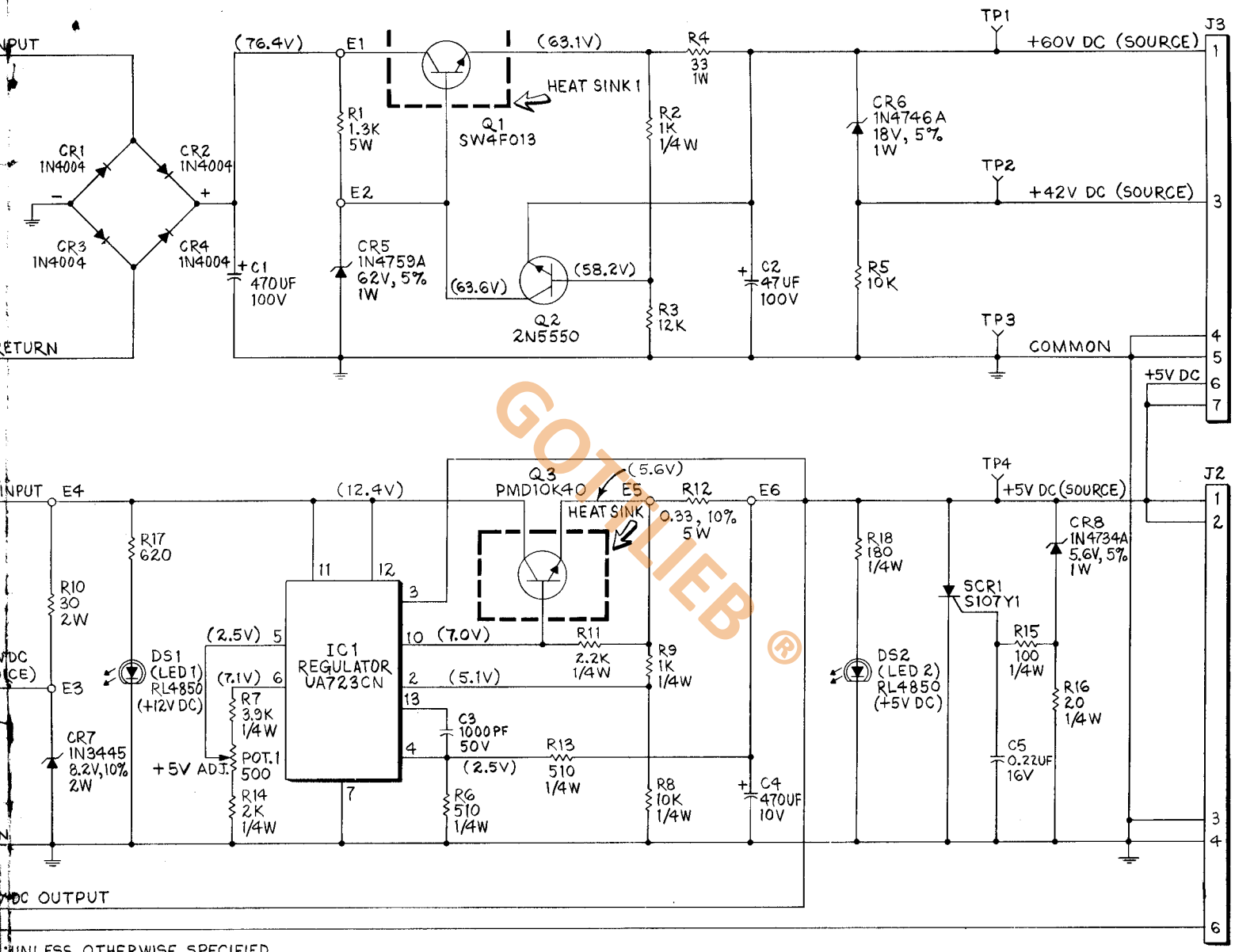

GOTTLIEB ®

:UNLESS OTHERWISE SPECIFIED,
STORS ARE ± 5%, 1/2W.
TAGES ARE DC WITH RESPECT TO CIRCUIT GROUND.
VOLTAGES ARE AT NOMINAL LINE VOLTAGE (115V AC).

D. GOTTLIEB & CO.			
TITLE / USED ON	POWER SUPPLY (A2) SYSTEM 80		
DRAWN	APPROVED	DATE	
[illegible]	BAM	2-3-81	E-20922

X. WIRING AND SCHEMATIC DIAGRAMS, PARTS LISTS

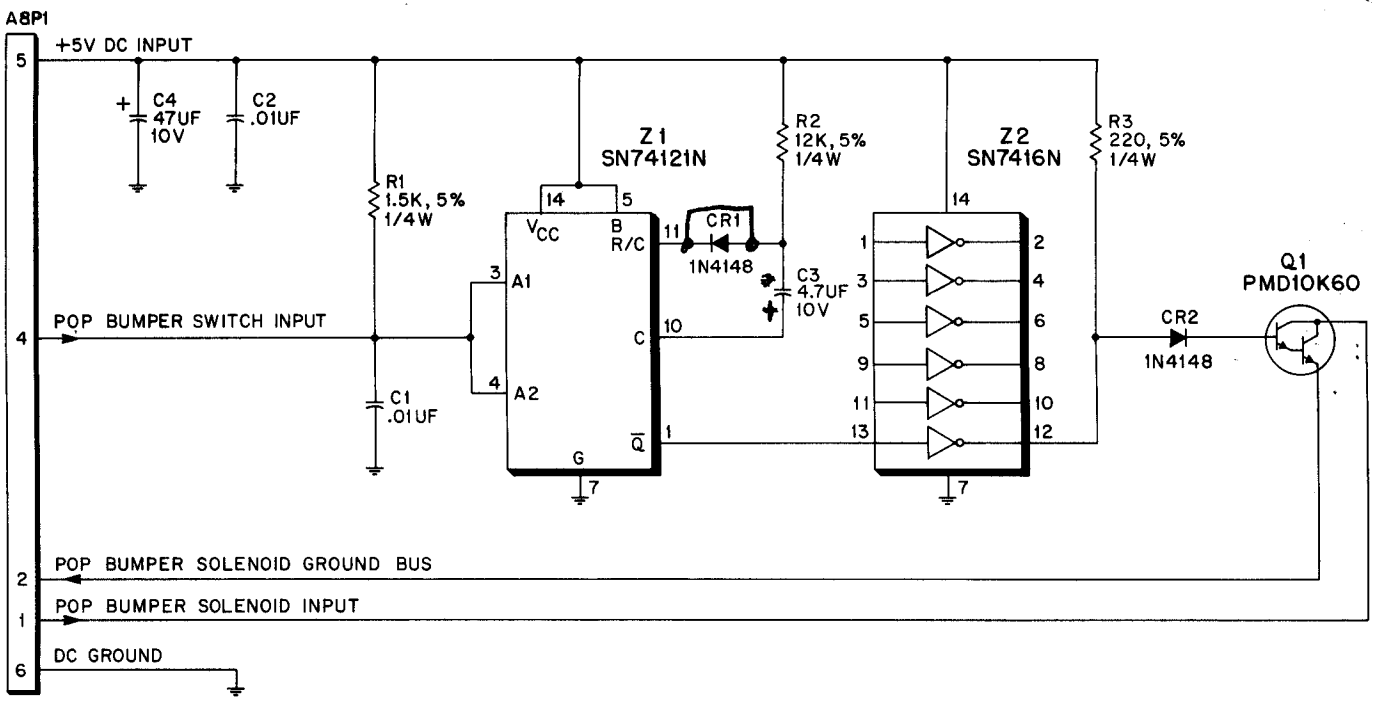

D. GOTTLIEB & CO.			
TITLE POP BUMPER DRIVER BOARD (A8)			
USED ON SYSTEM 80			
DRAWN B.P.B.	APPROVED BAM	DATE 2-9-81	D-20923

GOTTLIEB ®

POP BUMPER DRIVER BOARD (A8) COMPONENT LOCATION

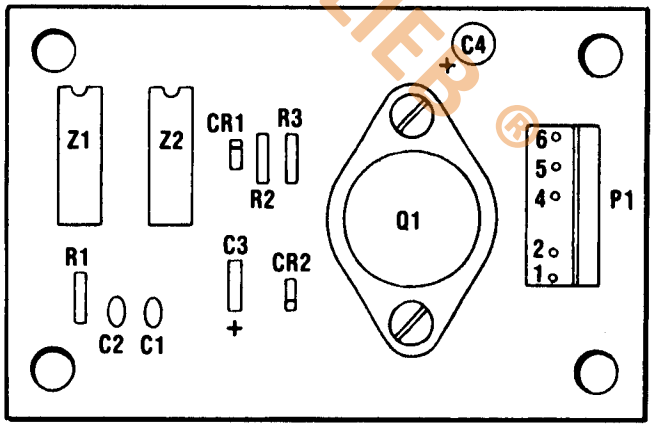

POP BUMPER DRIVER BOARD (A8) PARTS LIST

REFERENCE	DESCRIPTION	PART NUMBER
C1, C2	Capacitor, .01 mfd., 20%, 100V	
C3	Capacitor, 4.7 mfd., 10%, 10V	
C4	Capacitor, 47 mfd., 10V	
CR1, CR2	Diode	1N4148
P1	Connector	09-65-1061
R1	Resistor, 1.5K ohm, 5%, 1/4W	
R2	Resistor, 12K ohm, 5%, 1/4W	
R3	Resistor, 220 ohm, 1/4W, 5%	
Q1	Transistor—LAMBDA	PMD10K60
Z1	IC	SN74121N
Z2	IC	SN7416N

XI. PARTS INFORMATION

TABLE OF CONTENTS

	PAGE
CABINET PART	47
MAIN PLAYBOARD PARTS	48
MAIN PLAYBOARD SWITCH MATRIX PARTS/ LAMP ASSIGNMENTS	49
MIDDLE PLAYBOARD (UNDERSIDE) COMPONENTS	50
MIDDLE PLAYBOARD ASSEMBLIES	51
UPPER PLAYBOARD PARTS/ LOWER PLAYBOARD PARTS	52
UPPER PLAYBOARD SWITCH MATRIX PARTS/ LAMP ASSIGNMENTS/ LOWER PLAYBOARD SWITCH MATRIX PARTS/ LAMP ASSIGNMENTS	53
UPPER PLAYBOARD ASSEMBLIES/ LOWER PLAYBOARD ASSEMBLIES	54
UPPER PLAYBOARD (UNDERSIDE) COMPONENTS/ LOWER PLAYBOARD (UNDERSIDE) COMPONENTS	55
LIGHTBOX PARTS	56
TRAP DOOR ASSEMBLY	57
ROLLOVER TARGET ASSEMBLY	58
VERTICAL BALL KICKER ASSEMBLY	58

GOTTLIEB®

XI. PARTS INFORMATION

CABINET PARTS

ITEM	DESCRIPTION	PART NO.
1.	Cabinet	Specify Game
2.	Hold Down Angle Bracket	B-19587
3.	Lightbox Mounting Bracket (4 ea.)	A-19916
4.	Playboard Support Assy. (right)	D-21539
5.	Playboard Retainer, 2 ea. (right)	B-21189
6.	Playboard Prop Channel	B-21624
7.	Knocker Assy.	MA-12
8.	Flipper Switch	B-17838
9.	Ball Shooter Assy.	B-8835
10.	Convenience Outlet	MA-17
11.	Switch	A-15401
	Switch Housing	A-15163
12.	Fuse Assy.	MA-186
13.	Front Door Assy.	Specify Game
14.	Ball Roll Tilt	MA-13
15.	Lower Playboard Retainer (left)	B-21188
16.	Diode and Terminal Strip	A-21251
17.	Upper Playfield Support Assy. (left)	D-21538
18.	Speaker	EL-80
19.	Transformer Board Assy.	
	230 Vac Transformers	B-19550
		C-19554
	German Transformers	B-19549
		C19553
	Japanese Transformers	B-19550
	C-19554	
	Line Filter	EL-50
20.	Power Board	
	Fuse Block	EL-0
	7 Pos. Fuse Strip	EL-1
	Potentiometer, 100 ohm, 2 watt, 10%	XO-104
	F1 ½ Amp Fuse	EL-28
	F2 5 Amp Fuse Slo-Blo	EL-8
	F3 ¼ Amp Fuse Slo-Blo	EL-5
	F4 8 Amp Fuse Slo-Blo	EL-26
	F5 7½ Amp Fuse Slo-Blo	EL-22
	F6 7½ Amp Fuse	EL-22
	F7 7½ Amp Fuse	EL-22
	F8 1 Amp Fuse	EL-6
	Resistor .33 ohm, 6 watt, 10%	XO-154
	Capacitor 100 mfd, 25V	XO-212
	Capacitor 6800 mfd, 25 volt	XO-228
	Capacitor 4800 mfd, 50 volt	XO288
	Resistor 1500 ohm, 2 watt, 10%	XO-71
	Bridge Rectifier BR 354	EL-42
21.	Line Cord Housing	C-18534
22.	Cabinet Leg (4 ea.)	D-4337
	3" Leg Adjuster	MH-21

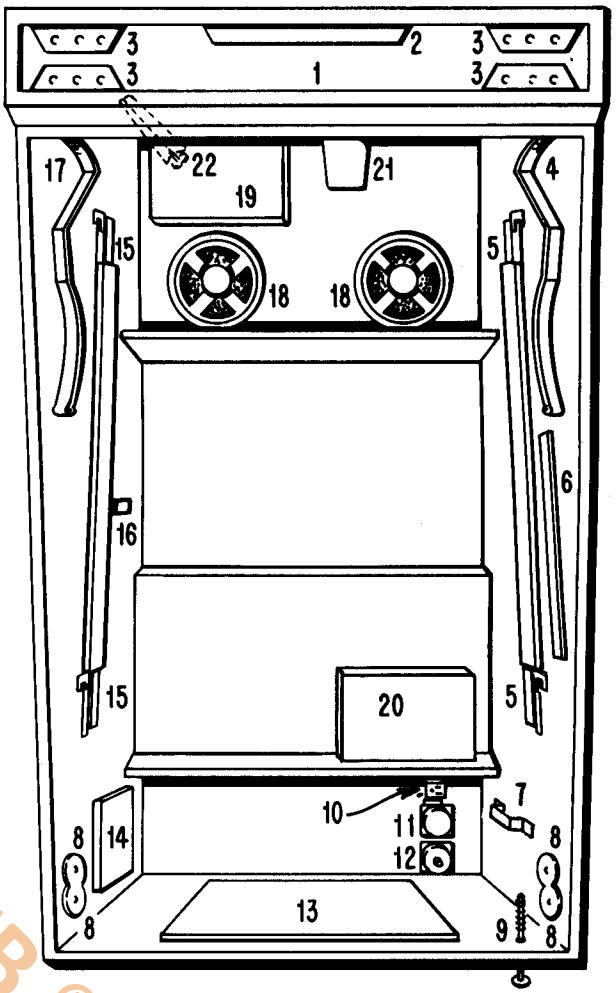

GOTTLIEB®

XI. PARTS INFORMATION

MAIN PLAYBOARD PARTS

	MIDDLE PLAYFIELD	
A	A-10217	(15)
B	A-10219	(2)
C	A-10220	(2)
D	A-10218	(1)
E	A-10222	(2)
F	A-13151	(4)
G	A-17493	(4)
H	A-15705	(1)

PARTS LIST

1. A-20271 Ball Gate Shield and A-20272 Wireform
2. A-4706 Rollunder Gate (2) and A-4705 Gate Shield (2)
3. B-19873 Arch Rod End Post and B-19874 Arch Rod End Post Cap
4. B-19875 Arch Rod Support Post (2)
5. D-19649 Arch Rod
6. C-21452 Metal Flat Rail
7. C-17492 Siamese Post-White (5)
8. B-21453 Vertical Kicker Deflector
9. A-21465 Upper Playfield Support Bracket
10. B-21593 Metal Flat Raid
11. A-21466 Upper Playfield Support Bracket
12. C-11561 Plastic Post, 1" High, Clear (25)
13. D-21140 Playboard Window, Green
14. FA-56 Allen Head Screws, 6-32 ⅝", Flatheads (10) FA-668 6-32 Tee Nut (10) and A-21219 Rubber Washers
15. A-21446 Ball Guide Rail
16. A-3722 Ball Guide Rail (3)
17. B-21450 Metal Flat Rail
18. C-21253 Illuminated Post (2)
19. A-17650 Ball Guide Rail (3)
20. MA-29 Pop Bumper Coil, Bracket and Pad
21. A-21591 Pop Bumper Trim Platter
22. C-10433 Pop Bumper Skirt (2) and C-10435 Body
23. A-21394 Pop Bumper Cap (2)
24. MA-250 Pop Bumper Coil, Bracket and Pad
25. A-21590 Pop Bumper Trim Platter
26. A-18070 Ball Guide Rail (2)
27. B-21449 Metal Flat Rail
28. A-6612 Ball Guide Rail
29. A-21447 Ball Guide Rail
30. A-21448 Ball Guide Rail
31. A-13798 Ball Snubber Wireform (2)
32. A-17106 Ball Guide Rail
33. D-21529 Plastic Set
34. A-13150 White Jumbo Flipper (4)
35. B-20210 Kicking Target Plastic Shield and A-21531 Decal
36. B-21419 Clear Tubing and B-21421 Tube Bracket and Deflector
37. C-9767 Ball Shooter Gauge
38. C-21454 Ball Ramp
39. A-9374 Target White (4)
40. E-18793 Card Holder
41. A-14792 Mini Post Screw

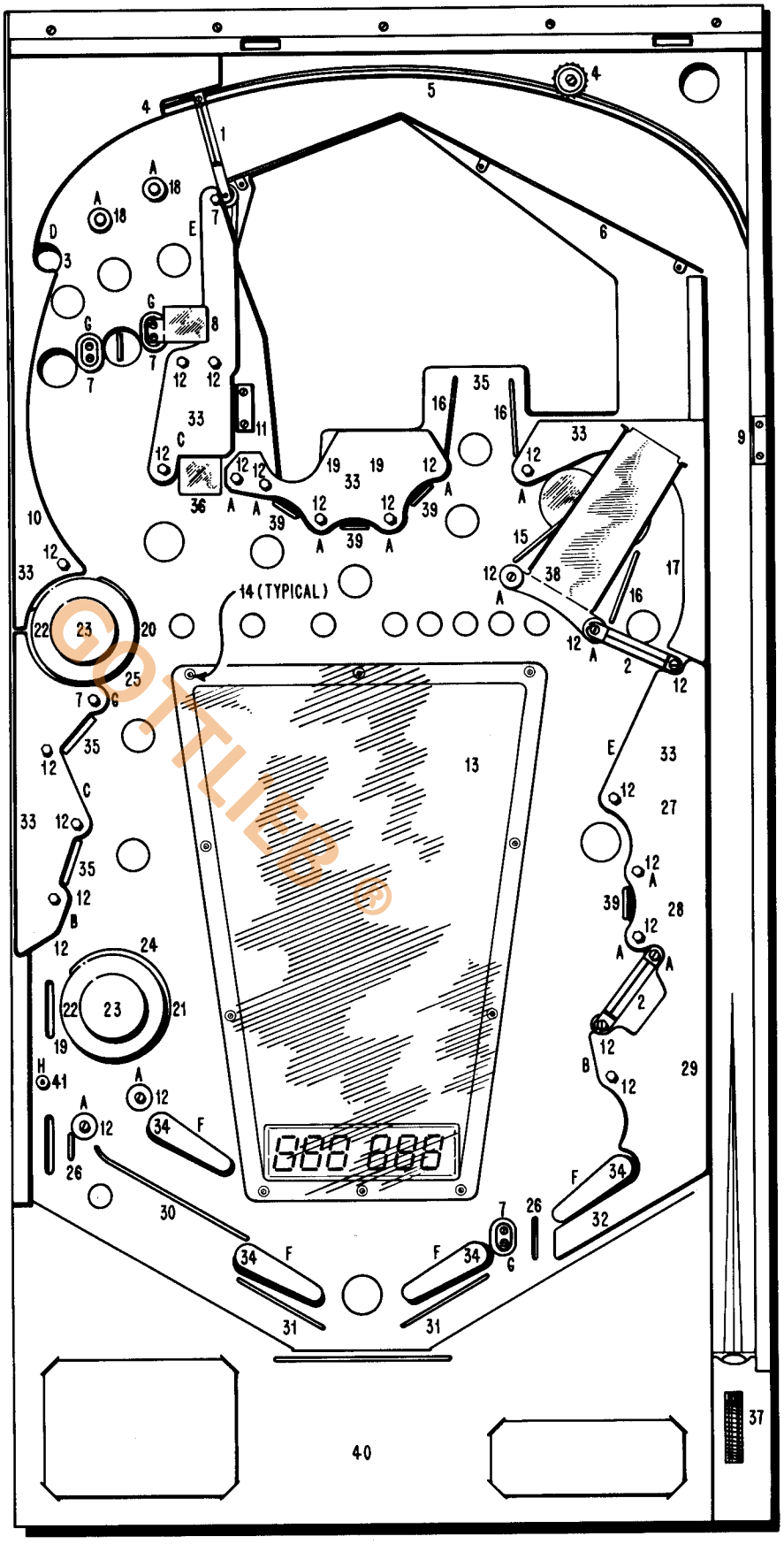

GOTTLIEB®

XI. PARTS INFORMATION

MAIN PLAYBOARD SWITCH MATRIX PARTS/LAMP ASSIGNMENTS

MIDDLE PLAYFIELD

SWITCH MATRIX NO.	SWITCH ASSIGNMENT	PART NO.
04	Left Return Rollover	B-18892
05	#3 Target	B-21561
06	#1 Trough	B-21492
14	#1 Kicking Target	B-18808
15	#4 Target	B-21561
16	#2 Trough	B-21492
24	#2 Kicking Target	B-21570
25	#5 Top Kicking Target	B-18808
26	Roll Down Target Trough	B-20978
34	Left Outside Rollover	B-19754
35	Rollunder	B-21137
36	Trap Door Trough	B-21492
44	Pop Bumper (Top)	B-19643
	Pop Bumper (Bottom)	B-19777
45	Up Kicker	B-21415
46	Top Center Hole	B-19857
54	Right Outside Rollover	B-19754
55	Right Bottom Target	B-21561
57	Tilt	B-8373
64	Roundabout	B-21569
65	Right Side Kicker	B-18079
66	10 Point (1)	B-18079
	Kicking Rubber (1)	B-18808
67	Outhole	B-18892

LAMP NO.	LAMP ASSIGNMENT
L18	Double Bonus Upstairs Playfield
L19	Double Bonus Main Playfield
L20	Double Bonus Cellar
L22	Double Scoring
L27	Top Left Hole
L28	Top Center Hole
L29	Top Right Hole
L30	#1 Kicking Target
L31	#2 Kicking Target
L32	#3 Target
L33	#4 Target
L34	#5 Kicking Target
L35	1X
L36	2X
L37	3X
L38	4X
L39	5X
L46	Left Outside Rollover
L47	Roundabout
L51	Roll Down Target

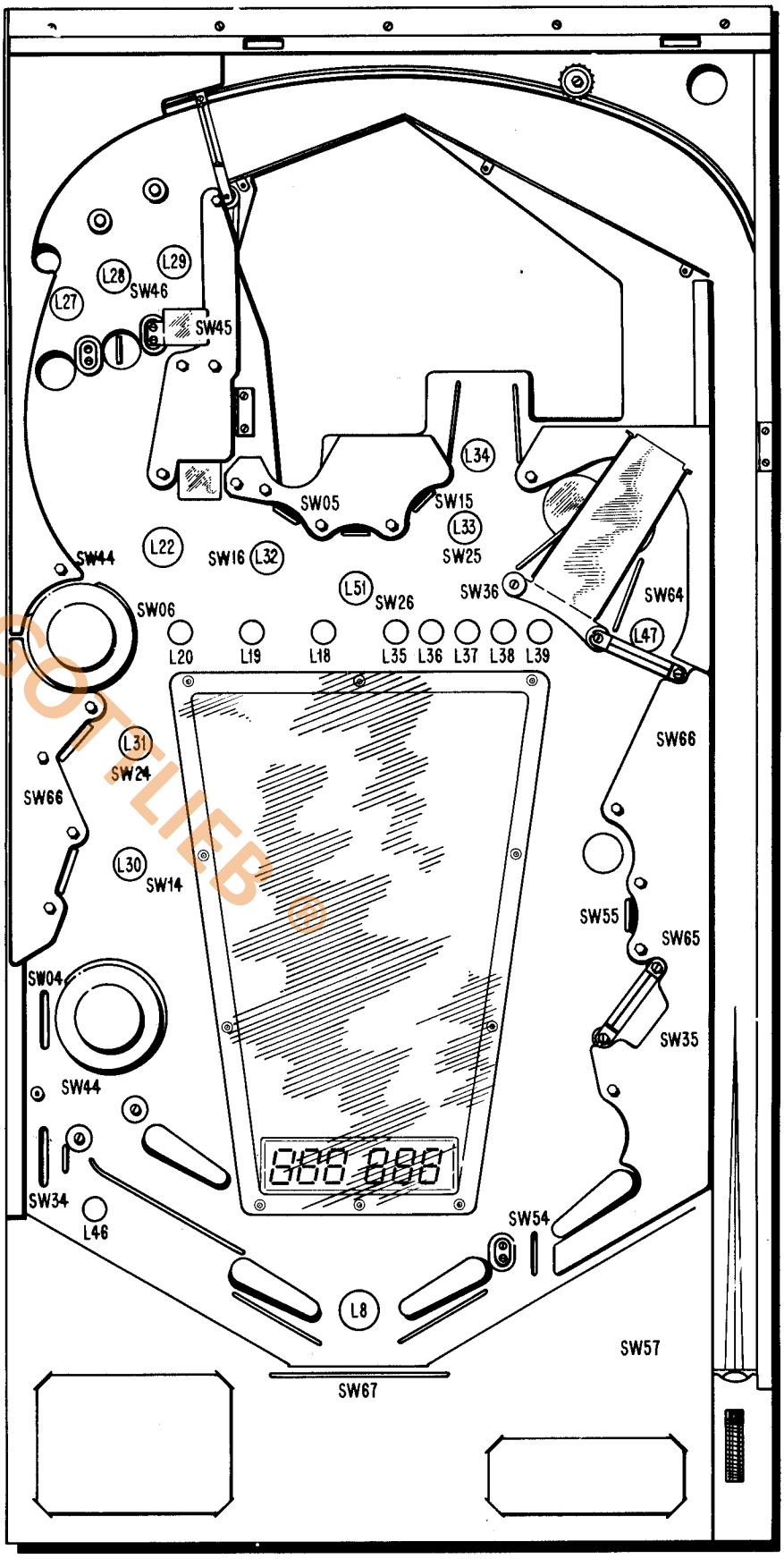

GOTLIEB ®

XI. PARTS INFORMATION

MIDDLE PLAYBOARD (UNDERSIDE) COMPONENTS

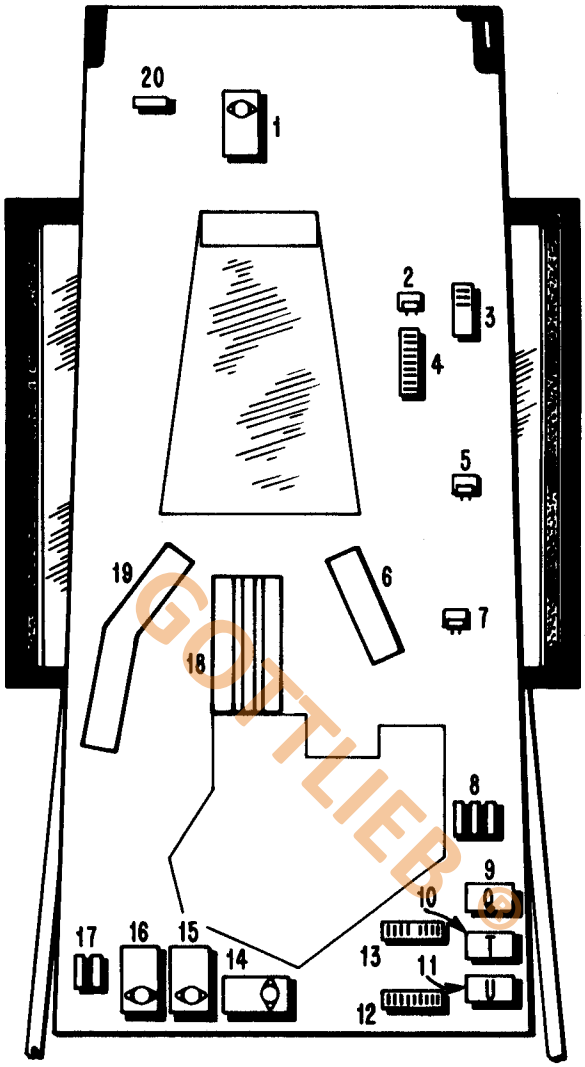

GOTTLIEB

ITEM	DESCRIPTION	PART NO.
1.	Pop Bumper Driver Board	A-19741
2.	Transistor and Bracket	A-21618
3.	2 Resistor and Strip Assy.	A-21634
4.	9 Diode and Strip Assy.	A-21497
5.	Transistor and Bracket	A-21618
6.	Trap Door Trough Assy.	C-21479
7.	Transistor and Bracket	A-21618
8.	Fuse Block (3 ea.)	EL-0
9.	"Q" Relay	MA-224
10.	"T" Relay	MA-225
11.	"U" Relay	MA-231
12.	9 Diode and Strip Assy.	A-21497
13.	8 Diode and Strip Assy.	A-21498
14.	Pop Bumper Driver Board	A-19741
15.	Pop Bumper Driver Board	A-19741
16.	Pop Bumper Driver Board	A-19741
17.	Fuse Block	EL-0
18.	Flip Target Trough Assy.	C-21490
19.	Ball Hole Trough Assy.	E-21485
20.	Fuse Block	EL-0

XI. PARTS INFORMATION

MIDDLE PLAYBOARD ASSEMBLIES

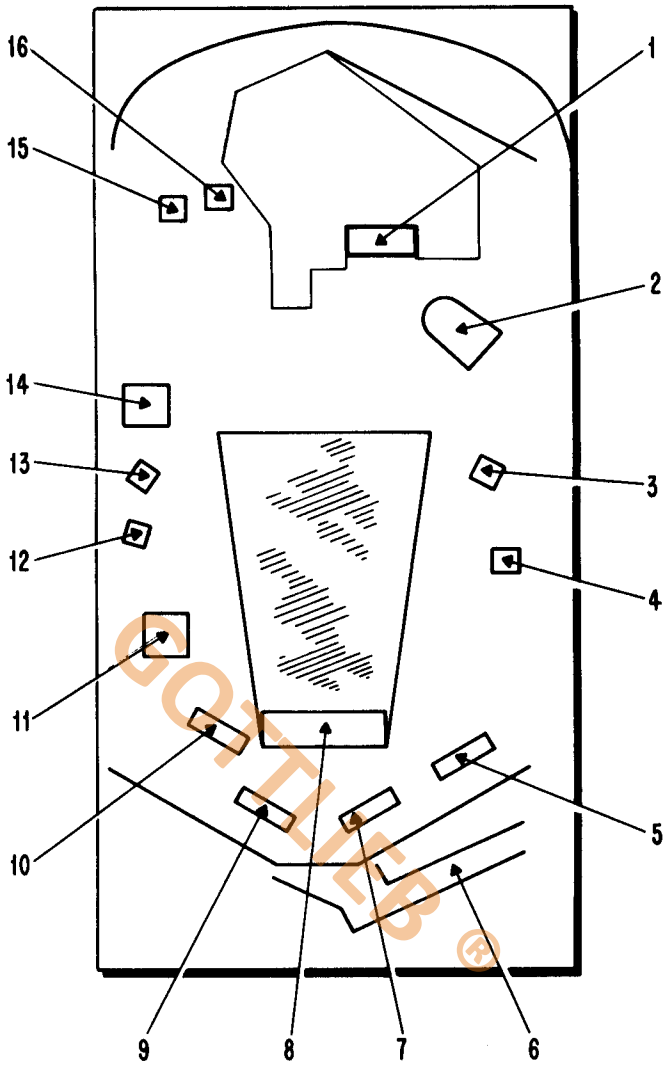

ITEM	DESCRIPTION	ASSEMBLY PART NO.	COIL PART NO.
1.	Kicking Target Assy.	MA-205	A-1496
2.	Trap Door Assy.	MA-230	A-17875
3.	Contact Kicker	MA-176A	A-5194
4.	Contact Kicker	MA-235	A-5195
5.	Flipper Assy. Right	MA-22A	A-17875
6.	Ball Return Unit	C-21623	A-5195
7.	Flipper Assy. Right	MA-22A	A-17875
8.	Six Digit Display Assy.	MA-116	—
9.	Flipper Assy. Left	MA-22	A-17875
10.	Flipper Assy. Left	MA-22	A-17875
11.	Pop Bumper Assy.	MA-250	A-4893
12.	Kicking Target Assy.	MA-169	A-5194
13.	Kicking Target Assy.	MA-169	A-5194
14.	Pop Bumper Assy.	MA-29	A-1496
15.	Hole Kicker Assy.	MA-153A	A-16570
16.	Vertical Ball Kicker Assy.	C-21418	A-5194

GOTTLIEB ®

XI. PARTS INFORMATION

UPPER PLAYBOARD PARTS

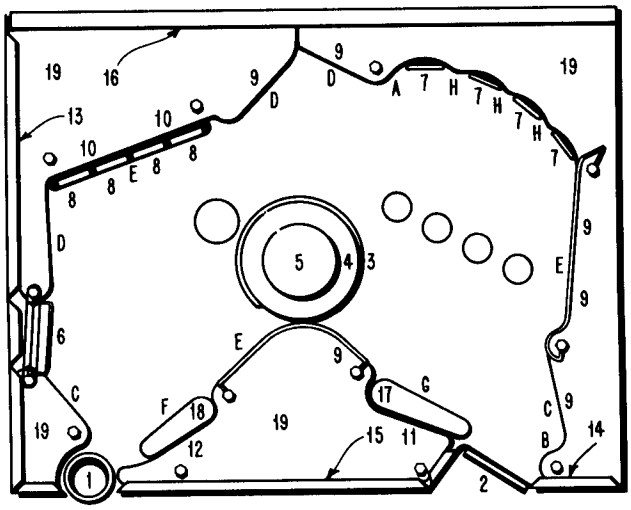

RUBBER RINGS

A	A-10217	(1)
B	A-10218	(1)
C	A-10219	(2)
D	A-10220	(3)
E	A-10222	(3)
F	A-13149	(1)
G	A-13151	(1)
H	A-15705	(3)

PARTS LIST

1. B-21457 Tube and Clamp
2. A-21458 Ramp Support Bracket
3. A-21589 Pop Bumper Platter
4. C-10435 Pop Bumper Body and C-10433 Skirt
5. A-21394 Pop Bumper Cap
6. A-17300 Gate Shield and A-17299 Wire Form
7. A-9347 Target - White (4)
8. A-19837 Drop Target - White (4)
9. A-18070 Ball Guide Rail (6)
10. A-17650 Ball Guide Rail (2)
11. A-6612 Ball Guide Rail
12. A-20028 Ball Guide Rail
13. C-21461 Edge Trim
14. B-21459 Edge Trim
15. B-21463 Edge Trim
16. B-21473 Edge Trim
17. C-13150 White Jumbo Flipper
18. C-11241 White Flipper
19. D-21530 Plastic Set

C-11561 Post 1" High - Clear (24)

LOWER PLAYBOARD PARTS

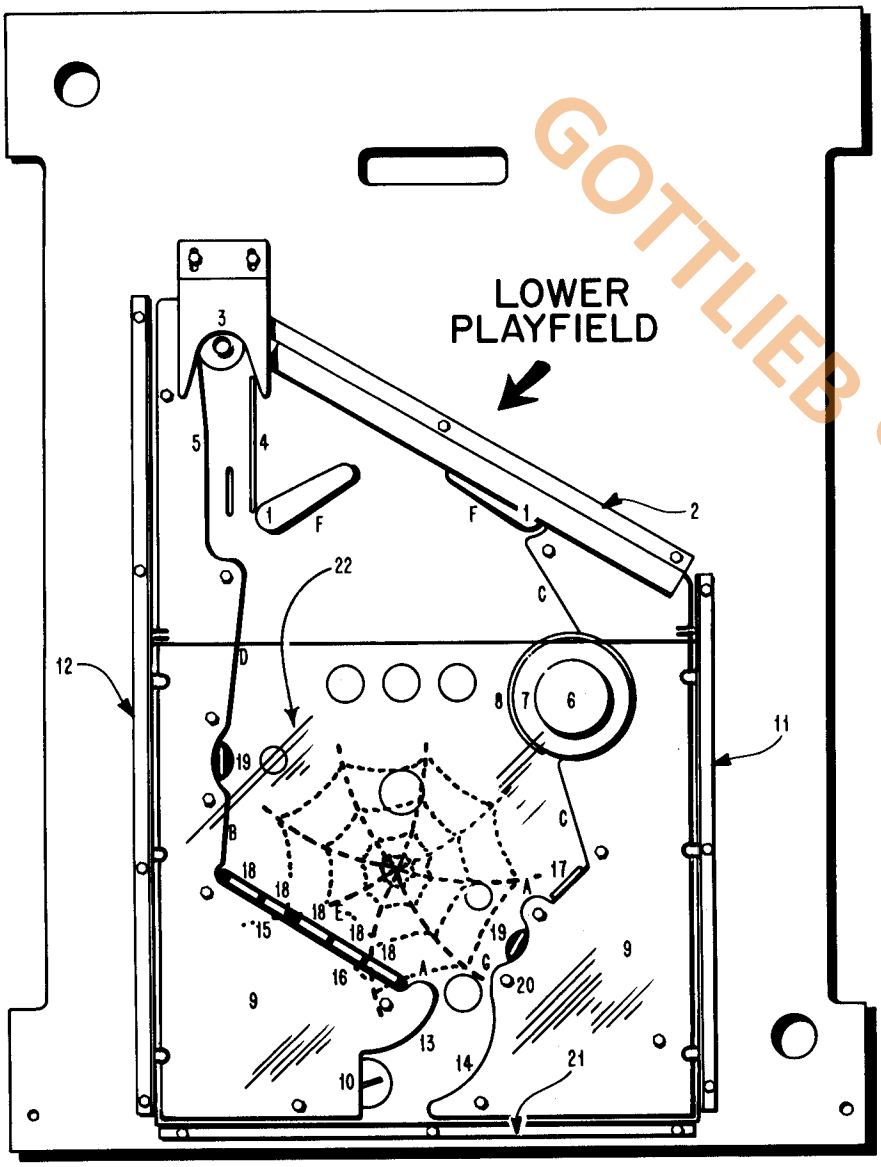

RUBBER RINGS

A	A-10217	(2)
B	A-10219	(1)
C	A-10220	(2)
D	A-10222	(1)
E	A-10223	(1)
F	A-13151	(2)
G	A-17493	(1)

PARTS LIST

1. C-13150 Jumbo Flipper - White
2. C-21406 Guard Rail
3. B-21410 Tube Support Bracket
4. A-13782 Ball Guide Rail
5. B-21404 Ball Guide Rail
6. A-21394 Pop Bumper Cap
7. A-10435 Pop Bumper Body and A-10433 Skirt
8. A-21592 Trim Platter
9. D-21530 Plastic Set
10. A-16038 Ball Snubber
11. C-21407-1 Ball Rail
12. D-21409-1 Ball Rail
13. A-20182 Ball Guide
14. B-21405 Ball Guide
15. A-17106 Ball Guide
16. A-17650 Ball Guide Rail
17. B-20210 Plastic Shield and A-21531 Decal
18. A-19837 Drop Target (5)
19. A-9374 Target
20. A-17492 Siamese Post
21. C-21408 Ball Rail
22. C-21226 Playboard Cover

C-11561 Post 1" High Clear (17)

GOTTLIEB ®

XI. PARTS INFORMATION

UPPER PLAYBOARD SWITCH MATRIX PARTS/LAMP ASSIGNMENTS

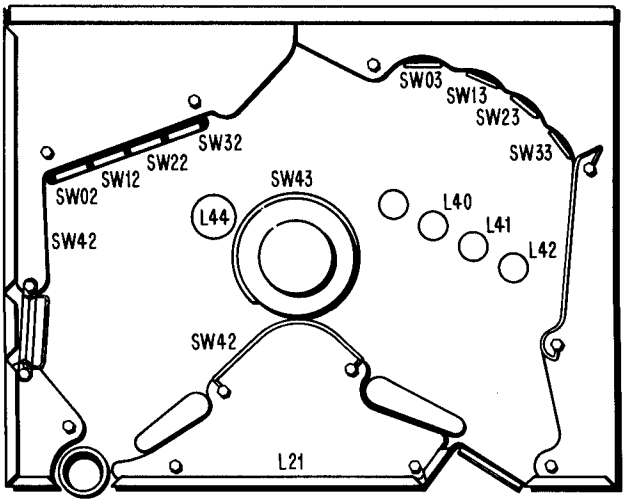

SWITCH MATRIX NO.	SWITCH ASSIGNMENT	PART NO.
02	#1 Drop Target	B-18094
03	#1 Target	B-20867
12	#2 Drop Target	B-18094
13	#2 Target	B-20867
22	#3 Drop Target	B-18095
23	#3 Target	B-20867
32	#4 Drop Target	B-18093
33	#4 Target	B-20867
42	10 Point (2)	B-18079
43	Pop Bumpers	B-19777

LAMP NO.	LAMP ASSIGNMENT
L21	Double Scoring
L40	#2 Target
L41	#3 Target
L42	#4 Target
L44	Special

LOWER PLAYBOARD SWITCH MATRIX PARTS/LAMP ASSIGNMENTS

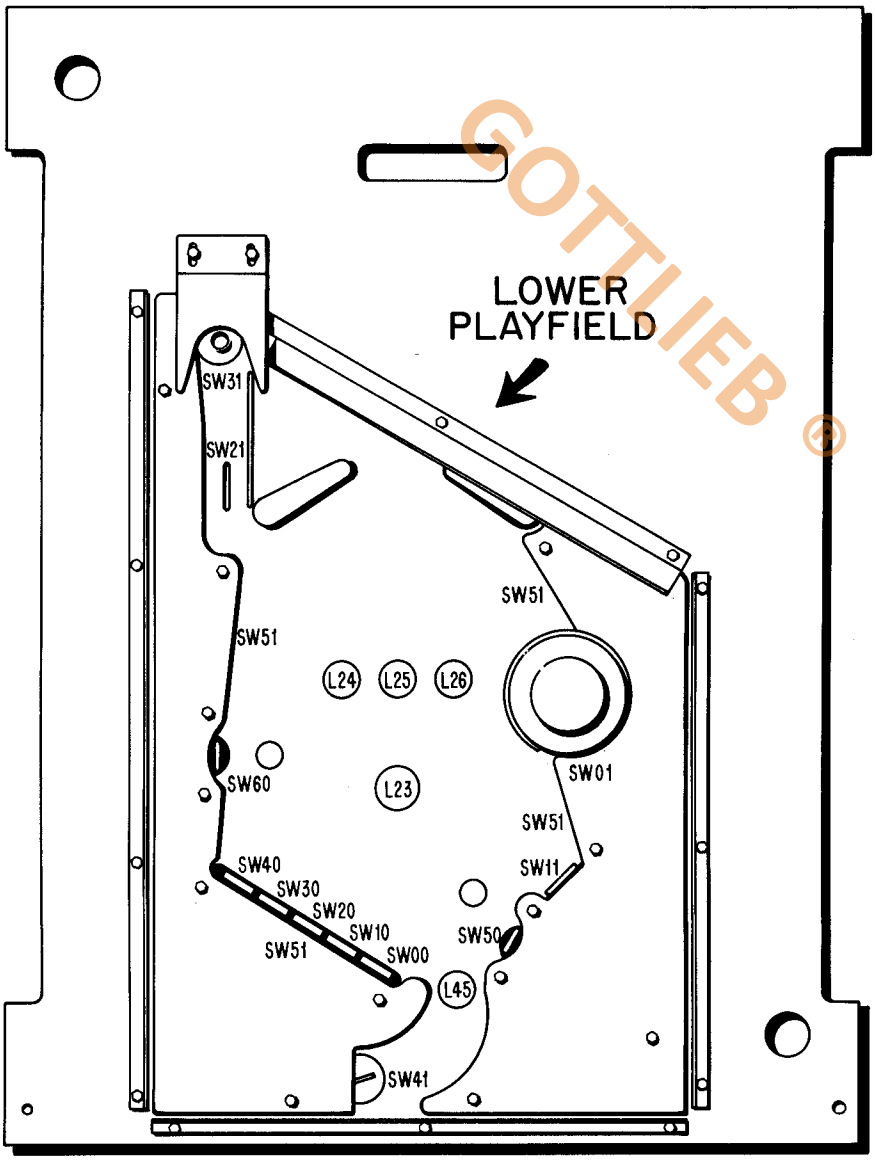

GOTTLIEB ®

LOWER PLAYFIELD

SWITCH MATRIX NO.	SWITCH ASSIGNMENT	PART NO.
00	#1 Drop Target	B-18094
01	Pop Bumper	B-19643
10	#2 Drop Target	B-18094
11	Kicking Target	B-18808
20	#3 Drop Target	B-18095
21	Outside Rollover	B-18892
30	#4 Drop Target	B-18093
31	Up Kicker	B-21415
40	#5 Drop Target	B-18093
41	Hole	B-19857
50	Right Target	B-21561
51	10 Point (Top)	B-18078
	10 Point (Bottom)	B-18079
	Kicking Rubber (1)	B-18808
60	Left Target	B-21561

LAMP NO.	LAMP ASSIGNMENT
L23	Double Scoring
L24	#1 Sequence
L25	#2 Sequence and Left Target
L26	#3 Sequence and Right Target
L45	Special

XI. PARTS INFORMATION

UPPER PLAYBOARD ASSEMBLIES

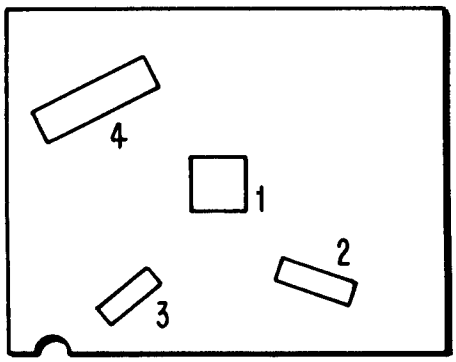

ITEM NO.	DESCRIPTION	ASSEMBLY PART NO.	COIL PART NO.
1.	Pop Bumper Assy.	MA-29	A-1496
2.	Flipper Assy. (Right)	MA-22A	A-17875
3.	Flipper Assy. (Left)	MA-228	A-17875
4.	Drop Target Assy.	MA-42	A-18102

LOWER PLAYBOARD ASSEMBLIES

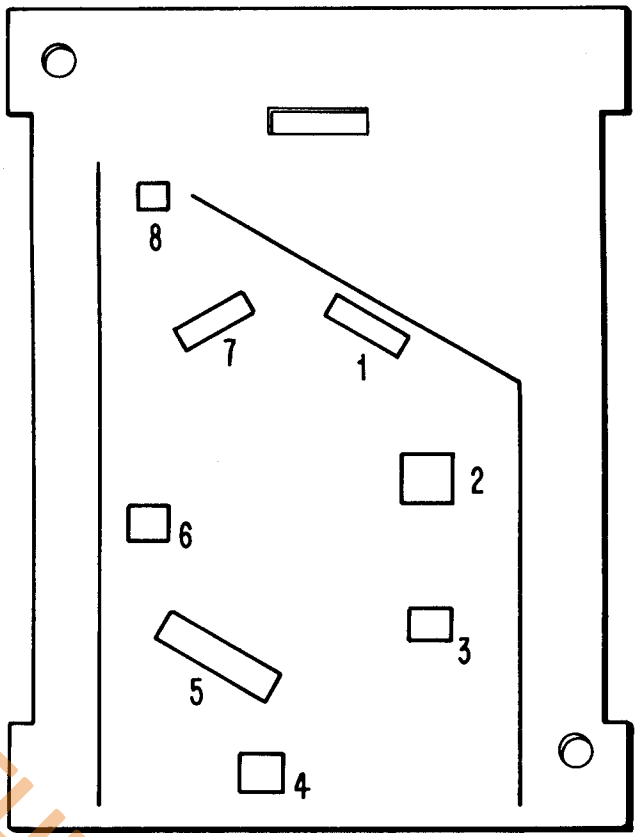

ITEM NO.	DESCRIPTION	ASSEMBLY PART NO.	COIL PART NO.
1.	Flipper Assy. (right)	MA-22A	A-17875
2.	Pop Bumper Assy.	MA-29	A-1496
3.	Kicking Target Assy.	MA-169	A-5194
4.	Hole Kicker Assy.	MA-153	A-16570
5.	Target Bank Assy.	MA-43A	A-17891
6.	Kicking Rubber Assy.	MA-135	A-1496
7.	Flipper Assy. (left)	MA-22	A-17875
8.	Vertical Ball Kicker Assy.	C-21417	A-21741

GOTTLIEB ®

XI. PARTS INFORMATION

UPPER PLAYBOARD (UNDERSIDE) COMPONENTS

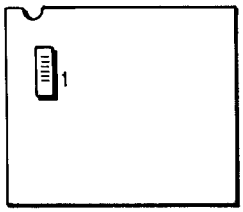

ITEM	DESCRIPTION	PART NO.
1.	6 Diode and Terminal Strip	A-21251

LOWER PLAYBOARD (UNDERSIDE) COMPONENTS

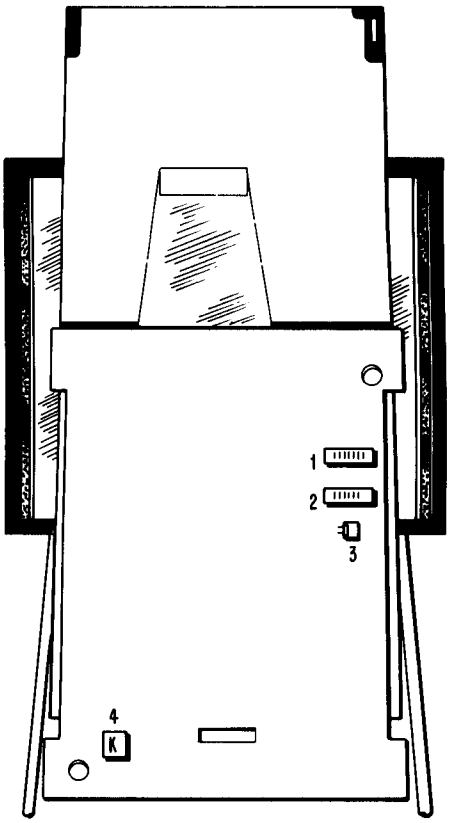

ITEM	DESCRIPTION	PART NO.
1.	7 Diode and Strip Assy.	A-21495
2.	6 Diode and Strip Assy.	A-21494
3.	Transistor and Bracket	A-21618
4.	"K" Gate Relay	MA-232
	Coil Only	A-20558

GOTTLIEB®

XI. PARTS INFORMATION

LIGHTBOX PARTS

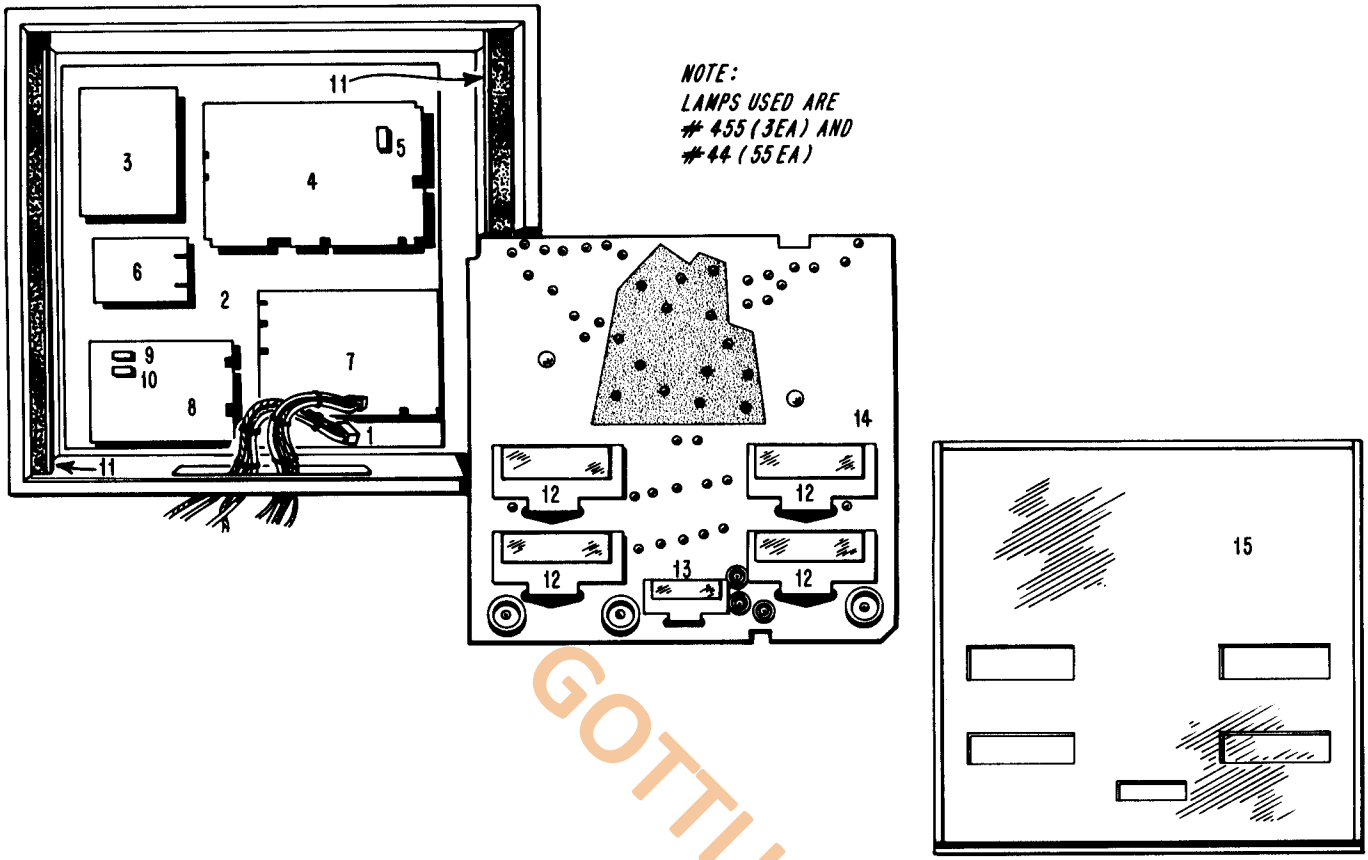

ITEM	DESCRIPTION	PART NO.
1.	Cable Assy.	Specify Game
2.	Light Box Assy.	Specify Game
3.	Power Supply Assy.	MA-114
4.	Control Board Assy.	RS-30
5.	Game Prom	669/1
6.	Sound/Speech Power Supply	MA-188
7.	Master Driver Board Assy.	RS-21
8.	Sound/Speech Board Assy.	MA-216
9.	Sound Prom	669/S2
10.	Sound Prom	669/S1
11.	Grill Assy. (2 ea.)	D-20405
12.	6 Digit Display	MA-116
13.	4 Digit Display	MA-115
14.	Insert	Specify Game
15.	Back Glass	Specify Game

NOTE: Auxiliary Lamp Driver Board not shown - **Part No.** MA-234.

GOTTLIEB ®

XI. PARTS INFORMATION

TRAP DOOR ASSEMBLY

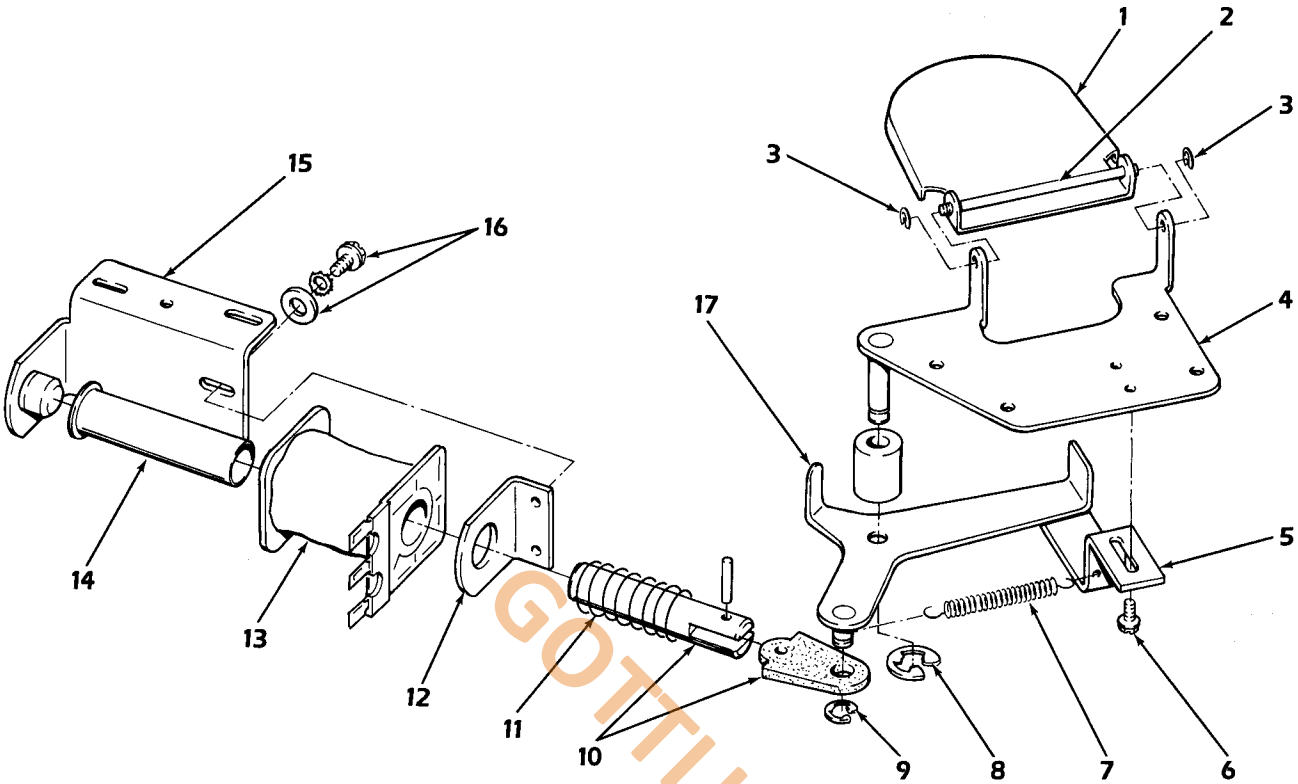

GOTTLIEB ®

ITEM	DESCRIPTION	PART NO.
1.	Trap Door, Bracket and Stop Assy.	A-21437
2.	Hinge Pin	A-21438
3.	Tru-Arc Retaining Ring #5133-12	FA-680
4.	Trap Door Mounting Plate	A-2384
5.	Support Bracket	A-2389
6.	Screw #6-32 x 3/16" Lg.	FA-87
7.	Spring	A-8727
8.	Tru-Arc Retaining Ring #5133-25	FA-683
9.	Tru-Arc Retaining Ring #5133-18	FA-682
10.	Link and Plunger Assy.	A-18686
11.	Spring	A-590
12.	Coil Mounting Bracket	A-15409
13.	Coil	A-17875
14.	Core	A-5065
15.	Coil Stop and Mounting	A-21441
16.	Screw	FA-67
	Washer	FA-617
17.	Lever Arm	A-21435

XI. PARTS INFORMATION

ROLLOVER TARGET

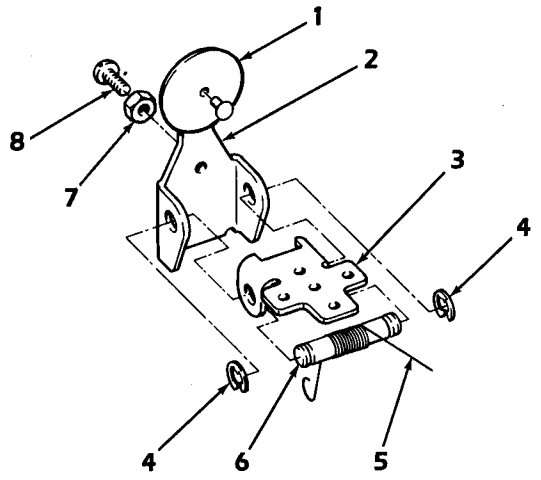

ITEM	DESCRIPTION	PART NO.
1.	Target Face	See Playboard Parts Information
2.	Target Arm	A-21429
3.	Fulcrum	A-15819
4.	Tru-Arc Retaining Ring #5133-18	FA-682
5.	Spring	A-21430
6.	Shaft	A-21431
7.	Nut #*-32	FA-652
8.	Screw	FA-300

VERTICAL UPKICKER

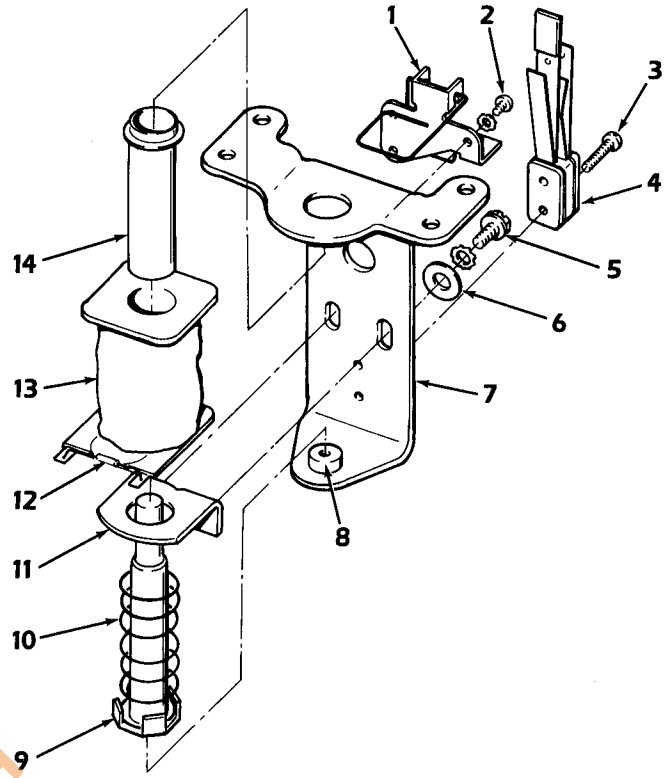

ITEM	DESCRIPTION	PART NO.
1.	Wire Form and Bracket	A-21414
2.	Screw - RHMS #66-32 x 3/16" Lg. (3 ea.)	FA-30
3.	Screw - RHMS #5-40 x 5/8" Lg.	FA-2
4.	Switch	B-21415
5.	Slotted Hex - WHMS #8-32 x 5/16" Lg.	FA-67
6.	Standard Washer #8	FA-617
7.	Coil Mounting Bracket	C-21416
8.	Rubber Grommet	A-5240
9.	Plunger	A-21412
10.	Spring	A-1942
11.	Coil Mounting Bracket	A-1509
12.	Diode - 1N4004	XO-254
13.	Coil	A-5194
14.	Sleeve	A-21411

COTTLEB®

Gottlieb™
AMUSEMENT GAMES
165 W. Lake Street Northlake, IL 60164
(312) 562•7400 Telex 72•8463
A Columbia Pictures Industries Company

GOTTLIEB®

© 1982 D. Gottlieb & Co.
All Rights Reserved
Printed in U.S.A.